For Husqvarna Parts Call 606-678-9623 or 606-561-4983

SB, 357 XP, 359, Metric screws, 2003-11

The screws that fasten the carburettor to the cylinder have been replaced to improve the strength of the screw joint reinforcement. Metric screws replace the self-tapping (PL) screws. New and old parts are fully interchangeable.

Introduced from serial number:	357XP	034200401
	359	034200901

New part no.	Description	Excl. part no.	Remark
725 53 41-55	Screw MC6S		

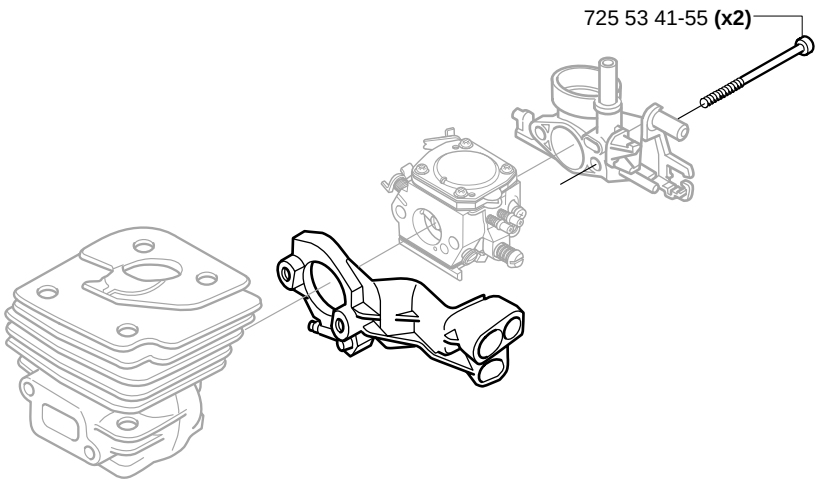

www.mymowerparts.com