For Briggs & Stratton Discount Parts Call 606-678-9623 or 606-561-4983

FORM MS-2217-12/92
REPLACES FORM MS-2217-5/92
FILE IN SECT. 2 OF SERVICE MANUAL

96500 to 96599

Illustrated Parts List

Model Series

96500 to 96599

Non-Compliance

TYPE NUMBERS
0100, 0101, 0111,
0113, 0114, 0115.

Compliance

TYPE NUMBERS
3100, 3101,
3113 through 3136
3187 through 3191
3199, 3200, 3202,
3510, 3511.

TO FIND
THE CORRECT NUMBER OF THE PART YOU NEED:
FOLLOW THE INSTRUCTIONS BELOW

A. Refer to Engine Model, Type and Code Number that is stamped on the blower housing of engine. Engine type numbers such as 0123 01 are listed only as 0123 in most instances. The two digits (01 or 02, etc.) to the right of the space may be required for more accurate parts identification in some instances. Select the Illustrated Parts List covering the correct Model Series and Type Number.

B. Refer to the Illustrations and compare the original part with Illustration. The number next to the illustration is the Reference Number. Assemblies include all parts shown in frames. All parts shown in assembly frames having individual reference numbers can be purchased separately.

C. After the Reference Number has been identified, refer to the Numerical text, where Reference and Primary Part Number are listed. THE PRIMARY PART IS USED ON ALL TYPE NUMBERS EXCEPT THOSE TYPE NUMBERS UNDER "NOTE."

D. If a "Note" appears below the Primary Part Number, it means that this part differs from the Primary Part for certain types. If your Type number is listed under "Note," order the part referred to at the "Note."

E. If your Engine Type Number does not appear after any part number listed under "Note," use the Primary Part Number.

F. For Engine Type Numbers not covered by this book, check other Parts Lists having the same engine model or contact your source of supply.

PRINTED IN U.S.A.

COPYRIGHT©

BRIGGS & STRATTON®

www.mymowerparts.com

For Briggs & Stratton Discount Parts Call 606-678-9623 or 606-561-4983

96500 to 96599

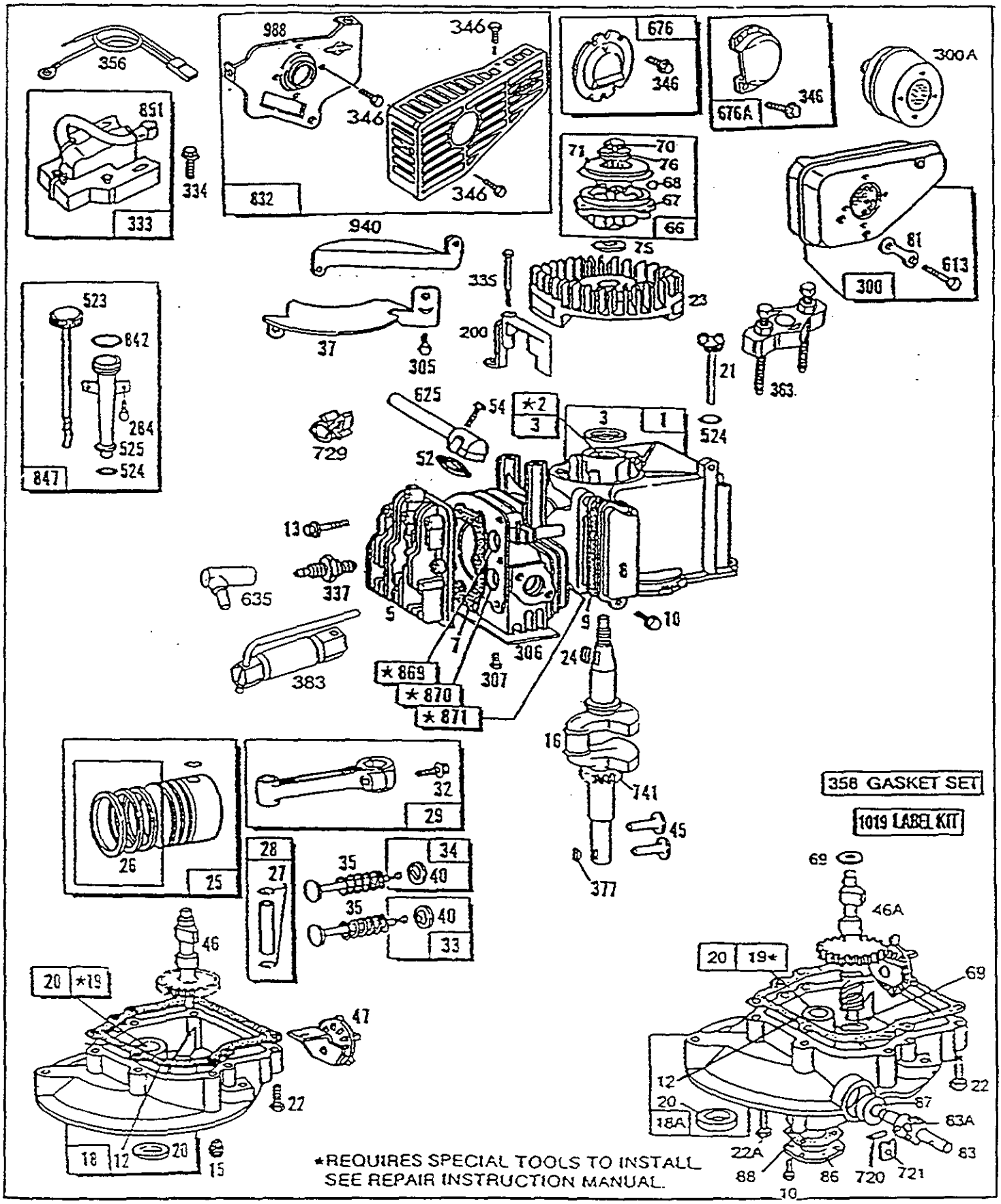

2217-2 Assemblies include all parts shown in frames. 42

www.mymowerparts.com

For Briggs & Stratton Discount Parts Call 606-678-9623 or 606-561-4983

96500 to 96599

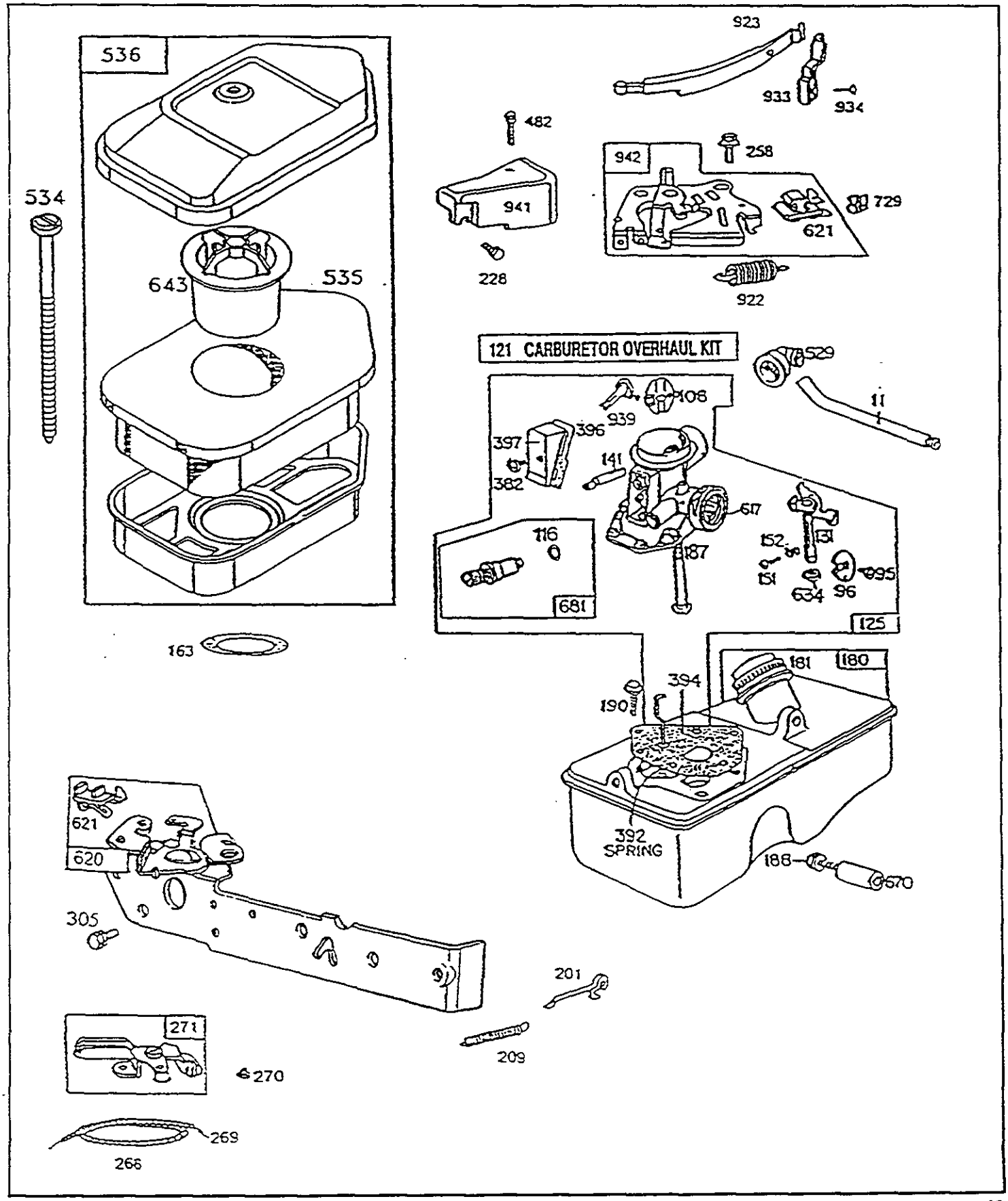

Assemblies include all parts shown in frames.

www.mymowerparts.com

For Briggs & Stratton Discount Parts Call 606-678-9623 or 606-561-4983

96500 to 96599

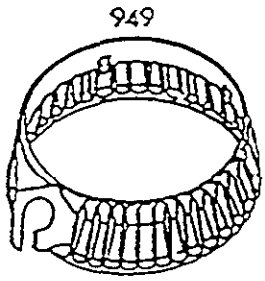

CYLINDER HEAD

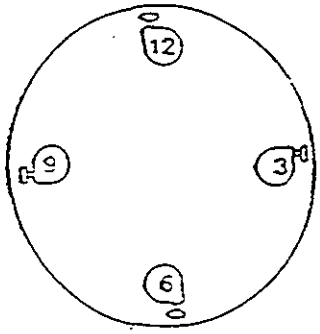

O'CLOCK POSITION

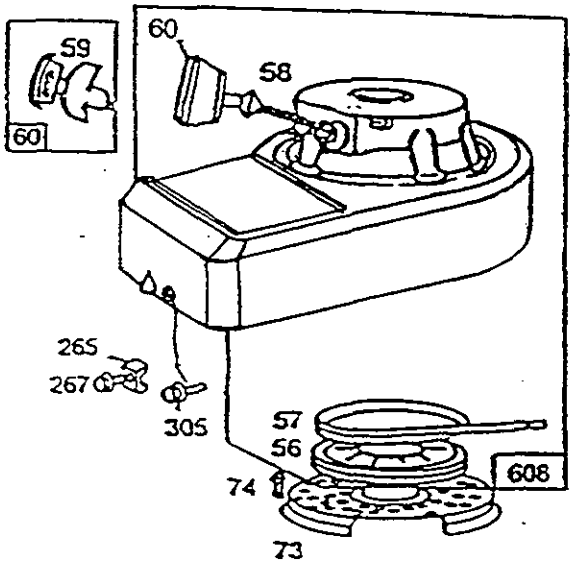

REWIND STARTER ASSEMBLIES FOR BAND-BRAKE

CLOCK POSITIONS					
1:30	3	5	6	9	12
493797	494738	493479	493596	493943	493300

REWIND STARTER ASSEMBLIES FOR NON-BAND-BRAKE

CLOCK POSITIONS				
3	5	6	8	12
493488	494509	493481	493594	493469

www.mymowerparts.com

For Briggs & Stratton Discount Parts Call 606-678-9623 or 606-561-4983

REF. NO.	PART NO.	DESCRIPTION
1	399164	Cylinder Assembly
2	293708	Bushing-Cyl. (Plain)
	Note:	Requires Special Tools For Installation.
3	★299819	Seal-Oil
5	211479	Head-Cylinder
	Note:	213942 Head-Cylinder Used on Engines with Muffler Guard.
7	★272170	Gasket-Cylinder Head
8	298383	Breather-Viv. Chamber
9	★270239	Gasket-Valve Cover
10	93394	Screw-Breather and P.T.O. Gear Cover (Ref. No. 86) Mtg. Sem
11	231272	Tube-Breather
12	★270833	Gasket-Crankcase (.015" Thick, Standard)
	★270895	Gasket-Crankcase (.005" Thick)
	★270896	Gasket-Crankcase (.009" Thick)
13	93111	Screw-Cylinder Head (1-15/16" Long)
15	91084	Plug-Oil Drain (Square Head)
	Note:	93418 Plug-Oil Drain (Flush)
16	492748	Crankshaft
	Note:	To Replace Crankshaft Gear Pin, Order Part No. 230978.
		397224 Crankshaft Used on Type Nos. 3116, 3121, 3125, 3136, 3187, 3199, 3200, 3202.
		492086 Crankshaft Used on Type Nos. 0101, 0114, 3101, 3114, 3117, 3118, 3119, 3120, 3123, 3127, 3130, 3510, 3511.
		493618 Crankshaft Used on Type No. 3131.
		494564 Crankshaft (Used After Code Date 91063000).
		493846 Crankshaft (Used Before Code Date 91070100). Used on Type Nos. 3115, 3124.
		494564 Crankshaft (Used After Code Date 91063000).
		494034 Crankshaft (Used Before Code Date 91070100). Used on Type No. 3191.
18	395384	Sump-Engine
18A	395390	Sump-Engine Used on Model 96582 Series Engines
19	293709	Bushing-Engine Sump (Plain)
	Note:	Requires Special Tools For Installation.
20	★391483	Seal-Oil
21	281081	Plug-Oil Fill
22	93032	Screw-Mtg. Sem
22A	93415	Screw-Mtg. Sem One Used in Aux. Drive Gear Sump on Model 96582 Series Engines.
23	395653	Flywheel-Magneto
	Note:	394066 Flywheel-Magneto Used on Type Nos. 0110, 0113.
24	222698	Key-Flywheel
25	298904	Piston Assy. (Standard)
	298905	Piston Assy. (.010" O.S.)
	298906	Piston Assy. (.020" O.S.)
	298907	Piston Assy. (.030" O.S.)
		MODEL 96500 SERIES PISTON RING SETS:
	Note:	For Chrome Piston Ring Set (Standard Size) Order Part No. 299742.
26	298982	Ring Set-Piston (Standard)
	298983	Ring Set-Piston (.010" O.S.)
	298984	Ring Set-Piston (.020" O.S.)
	298985	Ring Set-Piston (.030" O.S.)
27	26026	Lock-Piston Pin
28	298909	Pin Assy.-Piston (Std.)
	298908	Pin Assembly-Piston (.005" O.S.)
29	294201	Rod Assy.-Connecting
	Note:	For Connecting Rod With .020" Undersize Crankpin Bore-Order No. 296079.
32	94404	Screw-Connecting Rod
33	296676	Valve-Exhaust
34	296677	Valve-Intake
35	260552	Spring-Intake Valve
37	223150	Guard-Flywheel
40	93312	Retainer-Valve Spring
45	230173	Tappet-Valve
46	491675	Gear-Cam
46A	396197	Cam Gear, Worm and Oil Slinger Assy. (Clockwise)
	Note:	395317 Cam Gear, Worm and Oil Slinger Assy. (Counterclockwise) Used on Type Nos. 3113, 3114, 3116, 3119, 3125, 3130, 3134, 3136, 3189.
47	491688	Oil Slinger Gear and Bracket
52	★270345	Gasket-Intake Elbow
54	93485	Screw-Intake Elbow Mounting
56	280439	Pulley-Rewind Starter
57	490179	Spring-Rewind Starter

★ Included in Gasket Set-Part No. 298989.

● Included in Carburetor Overhaul Kit-Part No. 494622.

www.mymowerparts.com

For Briggs & Stratton Discount Parts Call 606-678-9623 or 606-561-4983

96500 to 96599

REF. NO.	PART NO.	DESCRIPTION
58	280406	Rope-Rewind Starter (81" Long, For Intermediate Lengths, Cut to Required Size.
	Note:	If Longer Rope is Needed, Order No. **280399** and Cut to Required Length.
59	396892	Insert-Starter Rope
60	393152	Grip-Starter Rope
66	399671	Clutch Assembly-Rewind Starter
67	394897	Housing-Starter Clutch
68	63770	Ball-Clutch
69	68938	Washer-Thrust
70	298799	Ratchet-Rewind Starter
71	394506	Washer-Clutch Retainer
73	221661	Screen-Rewind Starter
74	93758	Screw-Sem
75	223047	Washer-Spring
76	68238	Washer-Ratchet Sealing
81	223256	Lock-Muffler Screw
83	230831	Shaft-Drive
	Note:	**230948** Shaft-Drive Used on Type Nos. 3114, 3119, 3130, 3134, 3189. **231213** Shaft-Drive Used on Type Nos. 3125, 3136.
83A	231278	Gear-Drive
	Note:	**231279** Gear-Drive Used on Type Nos. 3113, 3114, 3116, 3119, 3125, 3130, 3134, 3136, 3189.
86	221780	Cover-Sump
87	391484	Seal-Oil
88	★270328	Gasket-Sump Cover
95	93499	Screw-Throttle Valve Mounting Sem
96	211203	Valve-Throttle
108	280370	Valve-Choke
116	•280203	O-Ring
121	494622	Carburetor Overhaul Kit
125	395375	Carburetor Assembly
131	394588	Shaft and Lever-Throttle
141	68908	Shaft-Choke
151	93524	Screw-Rd. Hd.
152	260746	Spring-Throttle Adj.
163	•★271139	Gasket-Air Cleaner Mounting
180	396778	Tank Assembly-Fuel
181	298425	Cap-Fuel Tank
187	393001	Pipe-Fuel
188	94102	Screw-Fuel Tank and Starter Mounting
190	93440	Screw-Fuel Tank Mtg.
200	68388	Blade-Governor
201	261027	Link-Governor
	Note:	**260878** Link-Governor Used on Type Nos. 0110, 0113.
209	261106	Spring-Governor
	Note:	**260877** Spring- Gov. Used on Type Nos. 0111, 3120. **261034** Spring-Gov. Used on Type Nos. 0100, 0101, 0110, 0114, 3100, 3101, 3121, 3133, 3134, 3136, 3187, 3199, 3200, 3202. **261105** Spring- Gov. Used on Type No. 3131. **261320** Spring Gov. Used on Type No. 0115. **261948** Spring- Gov. Used on Type Nos. 0113, 3116.
228	93490	Screw-Hex. Head
258	94018	Screw-Sem (Bracket to Cylinder)
265	22372	Clamp-Casing
267	93469	Screw-Clamp Mtg.
268	66986	Casing-Control Wire (48" Long)
	Note:	If Longer Casing is Needed, Specify Length in Inches; if a Shorter Casing is Needed Order No. **66986** and Cut to Required Length.
269	26099	Wire-Control (54" Long)
	Note:	If Longer Wire is Needed, Specify Length in Inches; if Shorter Wire is Needed, Order No. **26099** and Cut to Required Length.
270	63426	Locknut-Control Wire Casing
271	290568	Lever Assembly Control
284	94073	Screw-Hex. Head
300	394644	Muffler-Exhaust
300A	394569	Muffler-Exhaust (Lo-Tone)
305	94153	Screw-Blower Housing Mounting Sem
306	221805	Cylinder-Shield
307	93758	Screw-Cylinder Shield Mtg.
333	398593	Armature-Magneto
334	93381	Screw-Armature Mounting Sem
335	93435	Screw-Armature and Governor Blade Mounting Sem
337	492167	Plug-Spark (1-7/8" High, 48 mm)
	Note:	**293918** Plug-Spark (Resistor Type) (1-5/8" High, 42 mm) **802592** Plug-Spark (Resistor Type) (1-7/8" High, 48 mm)
346	93705	Screw-Hex. Head
356	398808	Wire-Ground
358	298989	Gasket Set
363	19069	Puller-Flywheel
377	93065	Key-Woodruff No. 6

★ Included in Gasket Set-Part No. 298989.

• Included in Carburetor Overhaul Kit-Part No. 494622.

www.mymowerparts.com

For Briggs & Stratton Discount Parts Call 606-678-9623 or 606-561-4983

REF. NO.	PART NO.	DESCRIPTION
382	93864	Screw-Choke Link Cover
383	89838	Wrench-Spark Plug
392	261016	Spring-Fuel Pump Diaphragm
394	•299637	Diaphragm-Carburetor
396	•270571	Gasket-Choke Link Cover
397	211678	Cover-Choke Link
482	93621	Screw-Sem
523	396372	Dipstick & Cap Assy.
524	⋆271485	Seal-Filler Tube
525	280578	Tube-Oil Fill
529	280368	Grommet-Breather
534	93865	Screw-Air Cleaner
535	272235	Element-Air Cleaner
536	493492	Cleaner Assembly-Air
608		Starter Assy.-Rewind See Chart on Illustrated Pages
613	93935	Screw-Muffler Mtg.
617	•270344	Seal-Fuel Intake Tube
620	299974	Plate-Carburetor Control
	Note:	299975 Plate-Carburetor Control Used on Type Nos. 0110, 0111. 490781 Plate-Carburetor Contol Used on Type Nos. 3510, 3511.
621	396847	Switch-Stop
625	298775	Tube-Fuel Intake
634	270167	Washer-Throttle Shaft (Felt)
635	66538	Elbow-Spark Plug
643	280972	Cup-Air Cleaner
670	94047	Spacer-Fuel Tank Used on Type Nos. Below 3000.
	Note:	94038 Spacer-Fuel Tank Used on Type Nos. Above 3000.
676	393756	Deflector-Muffler
676A	393760	Deflector-Muffler
681	•395508	Needle Valve Kit (Nylon Body)
720	93474	Pin-Gear to Shaft
721	221779	Stop-Drive Shaft
729	280470	Clip-Wire
741	261533	Gear-Timing
832	493967	Guard-Muffler
842	270920	Seal-Oil Fill Cap
847	399030	Tube Assy.-Oil Fill
851	221798	Terminal-Ignition Cable
869	211172	Seat-Intake Valve (Standard)
870	211291	Seat-Exhaust Valve (Standard)
	Note:	**For Installation and Options See Repair Manual.**
871	231348	Guide-Exhaust Valve
	Note:	63709 Guide-Intake Valve **See Repair Manual**
922	261647	Spring-Band Brake
923	394867	Brake Assembly-Band
933	223448	Pivot-Band Brake
934	94037	Screw-Band Brake Pivot
939	394929	Shaft Assembly-Choke
940	222403	Guard-Flywheel
941	280395	Cover-Linkage
942	493248	Bracket Assembly-and Lever
949	281192	Guard-Rewind Starter (Used After Code Date 91080400).
	Note:	280684 Guard-Rewind Starter (Used Before Code Date 91080500).
988	223600	Bracket-Muffler
1019	491082	Label Kit

⋆ Included in Gasket Set-Part No. 298989.

• Included in Carburetor Overhaul Kit-Part No. 494622.

www.mymowerparts.com