For Briggs & Stratton Discount Parts Call 606-678-9623 or 606-561-4983

FORM MS-4253-[illegible]
REPLACES FORM MS-4253-13
FILE IN SECT. 2 OF SERVICE MANUAL

80700 To 80797
81700 To 81797

Illustrated Parts List

MODEL SERIES

80700 To 80797

TYPE NUMBERS
0010 to 0045
0110 to 0176
944000 to 944272

81700 To 81797

TYPE NUMBERS
0110 to 0168
944500 to 944841

TO FIND
THE CORRECT NUMBER OF THE PART YOU NEED:
FOLLOW THE INSTRUCTIONS BELOW.

A. Refer to Engine Model, Type and Serial Number that is stamped on the blower housing or name plate of engine. (Engine type numbers such as 944271 are listed complete. Engine type numbers such as 0147 01 are listed herein only as 0147. The two digits (01 or 02, etc.) to the right of the space are not needed for parts identification). Then use the Illustrated Parts List covering these Model Series.

B. Refer to Illustrated Parts section and compare the old part with illustration. The number on the illustration is the Reference Number. Assemblies include all parts shown in frames. All parts shown in assembly frames on which individual reference numbers are given can be purchased separately.

C. After the Reference Number has been identified, refer to the Numerical Parts List, where Reference and Master Part Numbers are listed. THE MASTER PART IS USED ON ALL TYPE NUMBERS EXCEPT THOSE TYPE NUMBERS UNDER "NOTE"

D. If a "Note" appears below the Master Part Number, this means that this part differs from the Master Part for certain types. If the Type Number is listed under "Note", order the part referred to.

E. If the Engine Type Number does not appear after any part number listed under "Note", use the Master Part Number.

F. For Type Numbers higher than those covered by this book, please refer to the factory if you are unable to identify the part by comparison.

PRINTED IN U.S.A.

ORIGINAL BRIGGS & STRATTON SERVICE PARTS ®

www.mymowerparts.com

For Briggs & Stratton Discount Parts Call 606-678-9623 or 606-561-4983

80700 To 80797
81700 To 81797

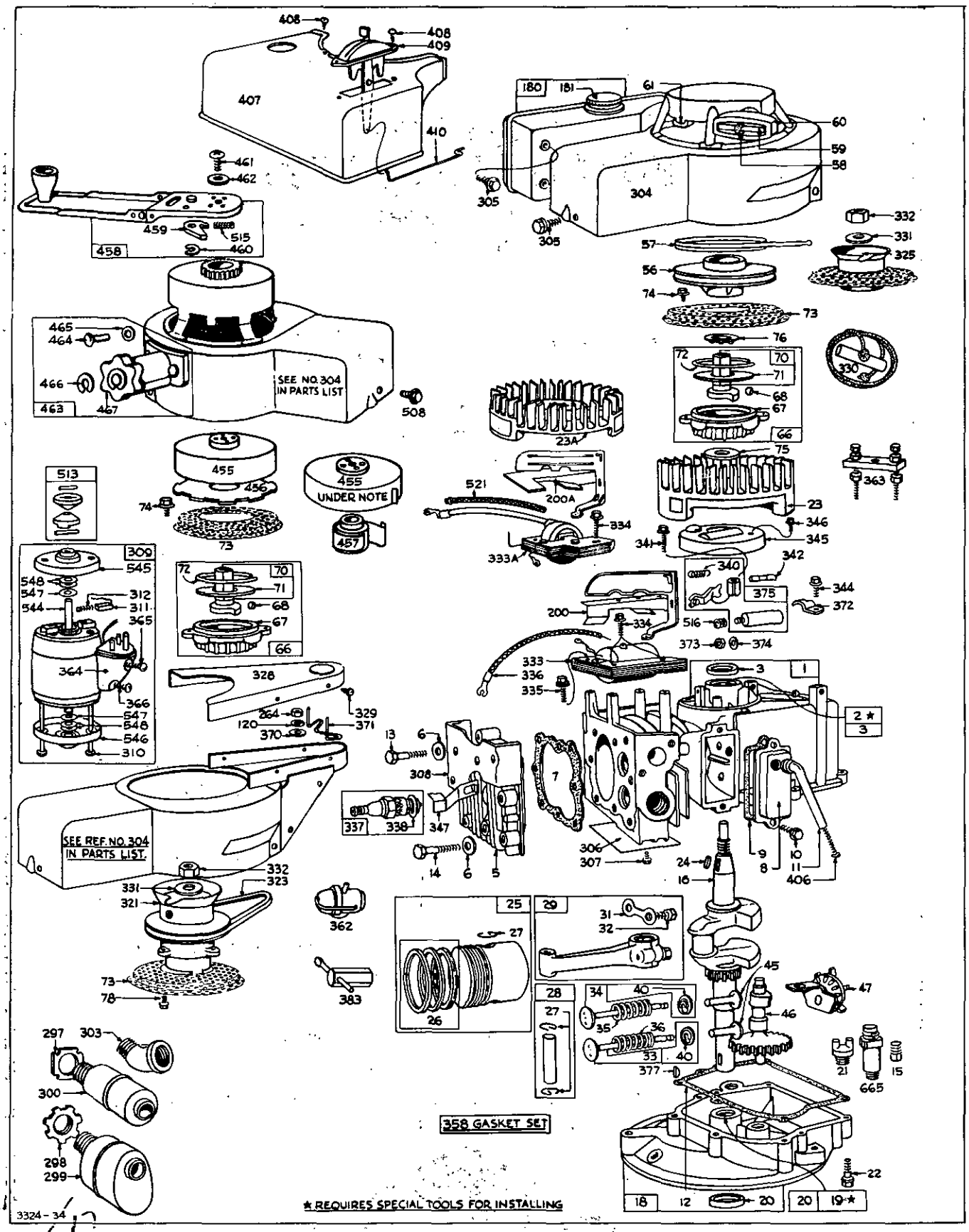

CYLINDER, CRANKSHAFT, PISTON, CONNECTING ROD, IGNITION AND BLOWER HOUSING PARTS
Assemblies Include All Parts Shown in Frames

www.mymowerparts.com

For Briggs & Stratton Discount Parts Call 606-678-9623 or 606-561-4983

80700 To 80797
81700 To 81797

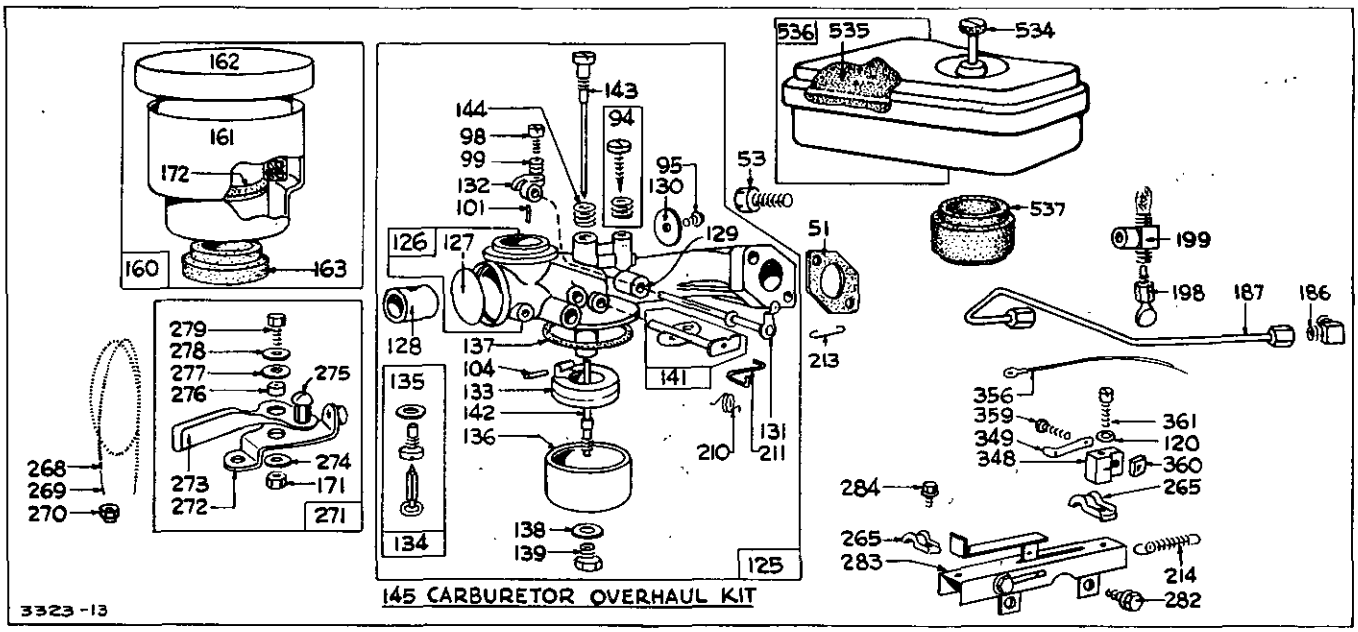

FUEL SYSTEM PARTS

Assemblies Include All Parts Shown in Frames

REF. NO.	PART NO.	DESCRIPTION
1	**295450**	Cylinder Assembly Used on Model 80700, 80790 Series.
	Note:	**296094** Cylinder Assembly Used on type Nos. 0149, 944143, 944186.
	296802	Cylinder Assembly Used on Model 81700 to 81790 Series.
2	**293708**	Bushing—Cylinder
	Note:	Requires special tools for installation.
3	**89660**	Seal—Oil
5	**210812**	Head—Cylinder
	Note:	**210623** Head—Cylinder Used on Model 80700 Series type No. 944060. **295053** Head—Cylinder Used on Model 80700 Series type No. 944143.
6	**22963**	Washer—Plain
7	***27670**	Gasket—Cylinder Head
	Note:	Two **27670** Cylinder Head Gaskets are used on Model 80700 Series type No. 944060.
8	**292833**	Breather—Valve Chamber
9	***27549**	Gasket—Valve Cover
10	**93394**	Screw—Breather Mtg. Sem
11	**66698**	Tube—Breather
12	***27586**	Gasket—Crankcase—.015" thick (Standard)
	***27617**	Gasket—Crankcase—.005" thick
	***27618**	Gasket—Crankcase—.009" thick
13	**91386**	Screw—Cylinder Head (2" long)
14	**92674**	Screw—Cylinder Head (2-3/8" long)
15	**91084**	Plug—Oil Drain
	Note:	**92738** Plug—Oil Drain (Magnetic) Used on Model 80700 Series type Nos. 0149, 944143, 944168. **93418** Plug—Oil Drain (Hex. Socket Head) Used on Model 80700 Series type Nos. 0016, 0017, 0131, 0144, 0146, 0147, 0150, 0153, 0158, 0161, 0173, 0174, 944015, 944017, 944024, 944025, 944046, 944060, 944063, 944107, 944119, 944136, 944192, 944194, 944217, 944218, 944221, 944238, 944241, 944242, 944255; also used on Model 81700 Series type Nos. 0131, 0132, 0143, 0144, 0151, 944525, 944528, 944596, 944620, 944645, 944655, 944656, 944676, 944689, 944695, 944697, 944714, 944717, 944718, 944721, 944722, 944724, 944726, 944746, 944747, 944753, 944776, 944793, 944798, 944802, 944806, 944807, 944815, 944816, 944833, 944840.

* Included in Gasket Set—Part No. 297275

www.mymowerparts.com

For Briggs & Stratton Discount Parts Call 606-678-9623 or 606-561-4983

80700 To 80797
81700 To 81797

REF. NO.	PART NO.	DESCRIPTION
16	**260124**	Crankshaft
	Note:	**260083** Crankshaft Used on Model 81700 Series type No. 944636. **260091** Crankshaft Used on Model 80700 Series type Nos. 0010, 0110, 944010, 944012, 944017, 944022, 944060, 944145, 944153, 944212, 944226; also used on Model 81700 Series type Nos. 0110, 944510, 944512, 944617, 944635, 944727, 944737, 944765, 944794, 944827, 944829. **260092** Crankshaft Used on Model 80700 Series type Nos. 944064, 944102; also used on Model 81700 Series type No. 944532. **260094** Crankshaft Used on Model 80700 Series type No. 944020; also used on Model 81700 Series type Nos. 0151, 944558, 944655, 944724, 944840. **260096** Crankshaft Used on Model 80700 Series type Nos. 0016, 0031, 0151, 0159, 0161, 0162, 0165, 0169, 0172, 944016, 944019, 944024, 944033, 944049, 944050, 944054, 944055, 944065, 944077, 944078, 944083, 944103, 944115, 944116, 944121, 944122, 944124, 944127, 944129, 944130, 944131, 944134, 944137, 944139, 944140, 944142, 944150, 944155, 944158, 944161, 944162, 944179, 944181, 944183, 944191, 944195, 944200, 944201, 944202, 944203, 944204, 944207, 944211, 944215, 944219, 944222, 944223, 944224, 944244, 944246, 944251, 944252, 944254, 944258, 944260, 944262, 944263, 944264; also used on Model 81700 Series type Nos. 0150, 0165, 944515, 944519, 944533, 944556, 944557, 944561, 944571, 944572, 944575, 944584, 944595, 944598, 944600, 944609, 944610, 944633, 944638, 944641, 944644, 944664, 944666, 944670, 944682, 944710, 944713, 944738, 944741, 944743, 944746, 944755, 944756, 944759, 944784, 944796, 944801, 944803, 944811, 944821, 944826, 944834. **260097** Crankshaft Used on Model 80700 Series type Nos. 0017, 944025, 944032, 944039, 944086, 944094, 944096, 944097, 944173, 944190, 944256; also used on Model 81700 Series type Nos. 944518, 944520, 944547, 944548, 944592, 944599, 944627, 944637, 944681, 944702, 944703, 944725, 944736, 944747, 944754, 944760. **260098** Crankshaft Used on Model 80700 Series type Nos. 0020, 0118, 0143, 0148, 0154, 0155, 0156, 0158, 0166, 0171, 944028, 944081, 944159, 944163, 944214, 944232, 944248, 944259, 944266, 944267, 944268, 944269; also used on Model 81700 Series type Nos. 0118, 0141, 0158, 944550, 944559, 944568, 944594, 944611, 944612, 944613, 944618, 944639, 944650, 944657, 944658, 944660, 944663, 944677, 944689, 944692, 944695, 944708, 944709, 944726, 944728, 944731, 944733, 944742, 944744, 944749, 944758, 944770, 944774, 944797, 944804, 944808, 944817, 944818, 944828, 944832. **260099** Crankshaft Uses: **220708** Shim—Crankshaft Thrust Used on Model 80700 Series type Nos. 0040, 0044, 0127, 0133, 0135, 0136, 0137, 0138, 0170, 944014, 944018, 944029, 944043, 944056, 944063, 944076, 944098, 944100, 944108, 944111, 944113, 944117, 944123, 944132, 944151, 944156, 944166, 944167, 944169, 944172, 944186, 944189, 944198, 944265, 944270, 944271; also used on Model 81700 Series type Nos. 0127, 0153, 0162, 0163, 0168, 944514, 944534, 944540, 944542, 944545, 944554, 944578, 944582, 944586, 944587, 944593, 944597, 944606, 944620, 944632, 944647, 944651, 944652, 944669, 944671, 944672, 944673, 944675, 944686, 944687, 944700, 944706, 944721, 944730, 944750, 944763, 944806, 944810, 944819, 944820, 944823, 944831, 944838, 944839. **260133** Crankshaft Used on Model 80700 Series type Nos. 944040, 944059, 944148, 944187, 944188, 944205; also used on Model 81700 Series type Nos. 944795, 944800.

www.mymowerparts.com

For Briggs & Stratton Discount Parts Call 606-678-9623 or 606-561-4983

REF. NO.	PART NO.	DESCRIPTION
		260159 Crankshaft Used on Model 80700 Series type No. 944080; also used on Model 81700 Series type Nos. 944579, 944580, 944589, 944604, 944621, 944824.
		260197 Crankshaft Used on Model 80700 Series type Nos. 944072, 944090; also used on Model 81700 Series type Nos. 944570, 944642.
		260207 Crankshaft Used on Model 80700 Series type Nos. 944034, 944036.
		260214 Crankshaft Used on Model 80700 Series type No. 944088.
		260223 Crankshaft Uses: **220708** Shim—Crankshaft Thrust Used on Model 80700 Series type No. 944047; also used on Model 81700 Series type No. 944531.
		260224 Crankshaft Uses: **220708** Shim—Crankshaft Thrust Used on Model 80700 Series type Nos. 0041, 0043, 944030, 944038, 944041, 944048, 944120, 944197, 944220, 944242; also used on Model 81700 Series type Nos. 0133, 0134, 0137, 0160, 944516, 944523, 944538, 944569, 944581, 944629, 944643, 944648, 944649, 944661, 944691, 944694, 944707, 944712, 944729, 944735, 944751, 944752, 944761, 944807, 944813, 944816, 944837.
		260234 Crankshaft Used on Model 80700 Series type No. 944051; also used on Model 81700 Series type No. 944776.
		260235 Crankshaft Used on Model 80700 Series type Nos. 0149, 0173, 944107, 944143, 944168, 944231, 944247, 944253; also used on Model 81700 Series type Nos. 0144, 0152, 944549, 944565, 944588, 944602, 944699, 944718, 944762, 944802, 944809, 944836.
		260241 Crankshaft Uses: **220708** Shim—Crankshaft Thrust Used on Model 80700 Series type Nos. 0042, 944196; also used on Model 81700 Series type Nos. 944524, 944546.
		260319 Crankshaft Used on Model 80700 Series type Nos. 0153, 944089, 944192, 944238.
		260390 Crankshaft Used on Model 81700 Series type Nos. 944526, 944528.
		260393 Crankshaft Uses: **220708** Shim—Crankshaft Thrust Used on Model 81700 Series type No. 944543.
		260400 Crankshaft Used on Model 80700 Series type No. 944230; also used on Model 81700 Series type Nos. 944562, 944563.
		260402 Crankshaft Uses: **220708** Shim—Crankshaft Thrust Used on Model 81700 Series type Nos. 944564, 944585.
		260405 Crankshaft Used on Model 81700 Series type Nos. 944573, 944574, 944659.
		260411 Crankshaft Used on Model 80700 Series type Nos. 0146, 0147, 944118, 944119, 944136, 944217, 944255; also used on Model 81700 Series type Nos. 944645, 944646, 944656, 944793.
		260416 Crankshaft Used on Model 80700 Series type No. 944101.
		260426 Crankshaft Used on Model 80700 Series type Nos. 944133, 944135.
		260451 Crankshaft Used on Model 80700 Series type No. 944144; also used on Model 81700 Series type No. 944674.
18	293512	Sump—Oil
	Note:	**293597** Sump—Oil Used on Model 80700 Series type Nos. 0144, 0147, 0153, 0158, 0161, 0173, 944060, 944118, 944119, 944136, 944192, 944194, 944238, 944255; also used on Model 81700 Series type Nos. 0151, 944645, 944646, 944655, 944656, 944724, 944726, 944840.
		294231 Sump—Oil Used on Model 80790 to 80797 and 81790 to 81797 Series with ¾" dia. Auxiliary P. T. O. Shaft ———— To replace Sump on these Model Series with a ½" dia. Auxiliary P. T. O. Shaft order No. 298280.
		295032 Sump—Oil Used on Model 81700 Series type Nos. 944546, 944806, 944807.
		295041 Sump—Oil Used on Model 80700 Series type No. 944259; also used on Model 81700 Series type Nos. 944708,

www.mymowerparts.com

For Briggs & Stratton Discount Parts Call 606-678-9623 or 606-561-4983

80700 To 80797
81700 To 81797

REF. NO.	PART NO.	DESCRIPTION
		944709, 944719, 944722, 944770, 944804, 944815, 944817, 944818, 944832.
19	293709	Bushing—Oil Sump Requires special tools for installation.
	Note:	No bushings are available for Model 80790, 81790 Series.
20	291841	Seal—Oil
	Note:	**294167** Seal—Oil (Crankshaft—P. T. O. Side)
		294160 Seal—Oil (For ¾" dia. Auxiliary Drive Shaft) Used on Model 80790 to 80797 and 81790 to 81797 Series.
		294167 Seal—Oil (Crankshaft—P. T. O. side)
		298041 Seal—Oil (For ½" dia. Auxiliary Drive Shaft) Used on Model 80790 to 80797 and 81790 to 81797 Series.
21	66768	Plug—Oil Filler
22	93032	Screw—Sump Mtg. Sem
23	293205	Flywheel—Magneto (Used before Serial No. 6212310)
	Note:	**295936** Flywheel—Magneto Used on all Model 80700 Series type Nos. 0149, 944143, 944168; also used before Serial No. 6212310 on type Nos. below. On and after this serial number, part number 296884 must be used on these type Nos. 944016, 944020, 944025, 944028, 944032, 944037, 944054, 944081, 944083, 944084, 944086, 944091, 944094, 944096, 944097, 944107, 944128, 944130, 944145, 944159, 944162, 944175, 944176, 944179, 944180, 944181, 944183, 944190, 944192, 944193, 944226, 944227, 944231, 944233, 944238, 944241, 944242; also used on Model 81700 Series type Nos. 944516, 944520, 944529, 944530, 944531, 944547, 944548, 944550, 944561, 944575, 944599, 944608, 944611, 944612, 944613, 944627, 944631, 944639, 944650, 944655, 944657, 944660, 944677, 944681, 944689, 944692, 944695, 944696, 944701, 944702, 944703, 944704, 944707, 944708, 944709, 944715, 944716, 944718, 944722, 944724, 944726, 944727, 944728, 944731, 944736, 944747, 944749, 944753, 944768, 944769, 944770, 944774, 944776, 944792, 944797, 944802, 944804, 944806, 944807, 944813, 944815, 944816, 944817, 944818.
23A	297949	Flywheel—Magneto (Used on and after Serial No. 6212310)
	Note:	**296884** Flywheel—Magneto Used on Model 80700 Series type Nos. 0017, 0020, 0153, 0158, 0159, 0160, 0161, 0166, 0167, 0171, 0172, 0173, 0175, 944259; also used on Model 81700 Series type Nos. 0132, 0144, 0151, 0158, 0159, 0160, 0161, 0165, 944832, 944834, 944835, 944836, 944837, 944840.
24	61760	Key—Flywheel
25	295587	Piston Assy. —Standard
	Note:	**295455** Piston Assy. —Std. Used on Model 81700 Series.
	295588	Piston Assy. —.010" O.S.
	Note:	**295456** Piston Assy. —.010" O.S. Used on Model 81700 Series.
	295589	Piston Assy. —.020" O.S.
	Note:	**295457** Piston Assy. —.020" O.S. Used on Model 81700 Series.
	295590	Piston Assy. —.030" O.S.
	Note:	**295458** Piston Assy. —.030" O.S. Used on Model 81700 Series.
MODEL 80700 SERIES RING SETS:		
26	294232	Ring Set—Std. Piston Consists of:
		210471 Ring, Piston, Compression, Top
		210472 Ring, Piston, Compression, Center
		210473 Ring, Piston, Oil
	294224	Ring Set—.010" O.S. Piston Consists of:
		210490 Ring, Piston, Comp., Top, .010" O.S.
		210489 Ring, Piston, Comp., Center, .010" O.S.
		210491 Ring, Piston, Oil, .010" O.S.
	294225	Ring Set—.020" O.S. Piston Consists of:
		210493 Ring, Piston, Comp., Top, .020" O.S.
		210492 Ring, Piston, Comp., Center, .020" O.S.
		210494 Ring, Piston, Oil, .020" O.S.
	294226	Ring Set—.030" O.S. Piston Consists of:
		210496 Ring, Piston, Comp., Top, .030" O.S.
		210495 Ring, Piston, Comp., Center, .030" O.S.
		210497 Ring, Piston, Oil, .030" O.S.

www.mymowerparts.com

For Briggs & Stratton Discount Parts Call 606-678-9623 or 606-561-4983

REF. NO.	PART NO.	DESCRIPTION
MODEL 81700 SERIES RING SETS:		
	295657	Ring Set–Std. Piston Consists of: **210796** Ring, Piston, Comp., Top, Std. **210797** Ring, Piston, Comp., Center, Std. **295661** Ring, Oil (with expander), Std.
	295658	Ring Set–.010" O.S. Piston Consists of: **210799** Ring, Piston, Comp., Top, .010" O.S. **210798** Ring, Piston, Comp., Center, .010" O.S. **295662** Ring, Oil (with expander), .010" O.S.
	295659	Ring Set–.020" O.S. Piston Consists of: **210801** Ring, Piston, Comp., Top, .020" O.S. **210800** Ring, Piston, Comp., Center, .020" O.S. **295663** Ring, Oil (with expander), .020" O.S.
	295660	Ring Set–.030" O.S. Piston Consists of: **210803** Ring, Piston, Comp., Top, .030" O.S. **210802** Ring, Piston, Comp., Center, .030" O.S. **295664** Ring, Oil (with expander), .030" O.S.
27	**26026**	Lock–Piston Pin
28	**291925**	Pin Assy.–Piston–Std.
	291926	Pin Assy.–Piston–.005" O.S.
29	**294201**	Rod Assy.–Connecting
31	**220756**	Lock–Conn. Rod Screw
32	**92296**	Screw–Connecting Rod
33	**296676**	Valve–Exhaust (Grooved Stem–Includes Retainer)
	Note:	**260075** Valve–Exhaust (with Hole in Stem–Used with No. 292259 Rotocap–See Ref. No. 40) Used on Model 80700 Series type Nos. 0149, 944143, 944168.
34	**296677**	Valve–Intake
	Note:	**230101** Valve–Intake Used on Model 80700 Series type Nos. 0149, 944143, 944168.
35	**260552**	Spring–Intake Valve
36	**26478**	Spring–Exhaust Valve
	Note:	**26826** Spring–Exhaust Valve Used on Model 80700 Series type Nos. 0149, 944143, 944168.
40	**93312**	Retainer–Valve Spring (Used with Valves with groove in Stem)
	Note:	**23184** Retainer–Valve Spring **23187** Pin–Valve Spring Retainer Used with Valves with hole in Stem. **292259** Rotocap–Exhaust Valve Used on Model 80700 Series type Nos. 0149, 944143, 944168. Uses: **230126** Pin–Exhaust Valve Rotocap Retainer **230127** Retainer–Exhaust Valve Rotocap
45	**230173**	Tappet–Valve
46	**210453**	Gear–Cam
	Note:	**210443** Gear–Cam Used on Model 80700 Series type Nos. 944018, 944029, 944038, 944056, 944063, 944196; also used on Model 81700 Series type Nos. 944524, 944534, 944540, 944542, 944543, 944546, 944554, 944582, 944750. **210549** Gear–Cam Used on Model 80700 Series type Nos. 944030, 944047, 944048; also used on Model 81700 Series type Nos. 944523, 944538, 944545, 944564, 944569, 944578, 944751. **210804** Gear–Cam (¾" dia. Shaft P.T.O. end) Used on Model 80790 to 80797 and 81790 to 81797 Series ---- For ½" dia. P.T.O. end Cam Gear for these Model Series ---- order No. 211337.
47	**294652**	Oil Slinger Gear and Brkt.
	Note:	**294718** Oil Slinger Gear and Bracket Used on Model 80790 to 80797 and 81790 to 81797 Series with ¾" dia. Auxiliary P.T.O. Shaft -- For these Model Series with ½" dia. Auxiliary P.T.O. Shaft use Part 294652.
51	**27355**	Gasket–Carburetor Mtg.
53	**93353**	Screw–Carburetor Mtg.
56	**294088**	Pulley–Rewind Starter
57	**294303**	Spring–Rewind Starter
58	**66384**	Rope–Rewind Starter–47-1/8" long
	Note:	If longer rope is needed, order No. 66514 and cut to required length.
59	**230228**	Pin–Starter Rope
60	**66728**	Grip–Starter Rope
61	**66528**	Bumper–Starter Pulley
66	**296468**	Clutch Assy.–Rewind and Wind-Up Starter
67	**210400**	Housing–Starter Clutch
68	**63770**	Ball–Clutch
70	**296597**	Ratchet–Starter
71	**221301**	Washer–Clutch Retainer
	Note:	**220575** Washer–Retainer (Used only with 7 point shank ratchet)
72	**26032**	Spring–Clutch Retainer

www.mymowerparts.com

For Briggs & Stratton Discount Parts Call 606-678-9623 or 606-561-4983

80700 To 80797
81700 To 81797

REF. NO.	PART NO.	DESCRIPTION
73	220648	Screen–Starter Pulley
74	93042	Screw–Rotating Screen Mounting Sem
75	220865	Washer–Spring (Used to lock starter clutch)
76	66738	Washer–Ratchet Sealing (Used only with 7 point shank ratchet)
78	93014	Screw–Pulley Screen Mounting Sem
94	†292681	Valve Assy.–Carb. Idle
95	93038	Screw–Choke and Throttle Valve Mounting Sem
98	91920	Screw–Machine, Fill. Hd. –8-32 x 5/8"
99	†26157	Spring–Throttle Adjustment
101	93043	Pin–Throttle Stop
104	†23114	Pin–Float Hinge
120	92290	Washer–Lock– No. 10 x 1/16 x 3/64"
125	294716	Carburetor Assy. (Choke-A-Matic)
	Note:	**294713** Carburetor Assy. (Manual Choke) Used on Model 80700 Series type Nos. 0010, 0015, 0016, 0017, 0018, 0020, 0040, 0041, 0042, 0110, 0115, 0118, 0128, 0133, 0136, 0142, 0143, 0158, 0159, 0160, 0166, 0167, 0171, 0172, 0173, 944010, 944011, 944012, 944014, 944016, 944020, 944022, 944023, 944024, 944025, 944026, 944028, 944029, 944030, 944032, 944035, 944037, 944038, 944040, 944041, 944047, 944051, 944060, 944063, 944064, 944075, 944078, 944083, 944087, 944090, 944091, 944094, 944110, 944112, 944116, 944118, 944128, 944134, 944138, 944141, 944143, 944145, 944150, 944153, 944154, 944158, 944160, 944163, 944164, 944166, 944170, 944176, 944178, 944179, 944180, 944181, 944183, 944184, 944196, 944202, 944205, 944207, 944209, 944210, 944218, 944223, 944226, 944229, 944231; also used on Model 81700 Series type Nos. 0110, 0115, 0118, 0128, 0131, 0132, 0135, 0136, 0137, 0143, 0144, 0149, 0151, 0156, 0157, 0160, 0161, 944510, 944511, 944512, 944514, 944524, 944541, 944542, 944543, 944556, 944561, 944564, 944565, 944571, 944574, 944575, 944577, 944585, 944587, 944588, 944589, 944597, 944599, 944600, 944601, 944603, 944609, 944613, 944627, 944630, 944631, 944632, 944633, 944634, 944637, 944639, 944646, 944647, 944650, 944655, 944657, 944659, 944661, 944663, 944666, 944675, 944676, 944679, 944680, 944681, 944683, 944684, 944686, 944689, 944692, 944693, 944695, 944696, 944697, 944701, 944704, 944707, 944708, 944709, 944715, 944716, 944718, 944722, 944723, 944724, 944726, 944731, 944732, 944734, 944735, 944737, 944746, 944747, 944748, 944749, 944750, 944751, 944753, 944765, 944767, 944768, 944769, 944770, 944774, 944776, 944782, 944785, 944786, 944788, 944790, 944791, 944795, 944797, 944799, 944800, 944803, 944804, 944805, 944807, 944808, 944813, 944823, 944830, 944833, 944836, 944837.
126	294717	Body Assy.–Carburetor (Choke-A-Matic)
	Note:	**294712** Body Assy.–Carburetor (Manual Choke) Used on Model 80700 Series type Nos. 0010, 0015, 0016, 0017, 0018, 0020, 0040, 0041, 0042, 0110, 0115, 0118, 0128, 0133, 0136, 0142, 0143, 0158, 0159, 0160, 0166, 0167, 0171, 0172, 0173, 944010, 944011, 944012, 944014, 944016, 944020, 944022, 944023, 944024, 944025, 944026, 944028, 944029, 944030, 944032, 944035, 944037, 944038, 944040, 944041, 944047, 944051, 944060, 944063, 944064, 944075, 944078, 944083, 944087, 944090, 944091, 944094, 944110, 944112, 944116, 944118, 944128, 944134, 944138, 944141, 944143, 944145, 944150, 944153, 944154, 944158, 944160, 944163, 944164, 944166, 944170, 944176, 944178, 944179, 944180, 944181, 944183, 944184, 944196, 944202, 944205, 944207, 944209, 944210, 944218, 944223, 944226, 944229, 944231; also used on Model 81700 Series type Nos. 0110, 0115, 0118, 0128, 0131, 0132, 0135, 0136, 0137, 0143, 0144, 0149, 0151, 0156, 0157, 0160, 0161, 944510, 944511, 944512, 944514, 944524, 944541, 944542, 944543, 944556, 944561, 944564, 944565, 944571, 944574, 944575, 944577, 944585, 944587, 944588, 944589, 944597, 944599, 944600, 944601, 944603, 944609, 944613,

† Included in Carburetor Overhaul Kit– Part No. 294714

www.mymowerparts.com

For Briggs & Stratton Discount Parts Call 606-678-9623 or 606-561-4983

REF. NO.	PART NO.	DESCRIPTION
		944627, 944630, 944631, 944632, 944633, 944634, 944637, 944639, 944646, 944647, 944650, 944655, 944657, 944659, 944661, 944663, 944666, 944675, 944676, 944679, 944680, 944681, 944683, 944684, 944686, 944689, 944692, 944693, 944695, 944696, 944697, 944701, 944704, 944707, 944708, 944709, 944715, 944716, 944718, 944722, 944723, 944724, 944726, 944731, 944732, 944734, 944735, 944737, 944746, 944747, 944748, 944749, 944750, 944751, 944753, 944765, 944767, 944768, 944769, 944770, 944774, 944776, 944782, 944785, 944786, 944788, 944790, 944791, 944795, 944797, 944799, 944800, 944803, 944804, 944805, 944807, 944808, 944813, 944823, 944830, 944833, 944836, 944837.
127	**†220751**	Plug Welch
128	**210528**	Venturi–Carburetor
129	**23230**	Bushing–Throttle Shaft
130	**220791**	Valve–Throttle
131	**294437**	Shaft and Lever Assy.–Throttle
132	**61967**	Stop–Throttle
133	**293477**	Float–Carburetor
134	**†293478**	Valve and Seat–Fuel Inlet
135	**†68877**	Gasket–Fuel Inlet Seat
136	**220761**	Bowl–Float
137	**†27682**	Gasket–Float Bowl
138	**†221172**	Washer–Float Bowl Mtg.
139	**93086**	Screw–Carburetor Bowl Mounting
141	**297024**	Valve, Shaft and Lever Assembly–Choke (Choke-A-Matic)
	Note:	**294874** Valve, Shaft and Lever Assy.–Choke (Manual Choke)

* Included in Gasket Set–Part No. 297275

REF. NO.	PART NO.	DESCRIPTION
		Uses: **23270** Screw–Choke Lever **26229** Spring–Choke Lever **220886** Valve–Choke **220899** Washer Used on Model 80700 Series type Nos. 0010, 0015, 0016, 0017, 0018, 0020, 0040, 0041, 0042, 0110, 0115, 0118, 0128, 0133, 0136, 0142, 0143, 0158, 0159, 0166, 0167, 0171, 0172, 0173, 944010, 944011, 944012, 944014, 944016, 944020, 944022, 944023, 944024, 944025, 944026, 944028, 944029, 944030, 944032, 944035, 944037, 944038, 944040, 944041, 944047, 944051, 944060, 944063, 944064, 944075, 944078, 944083, 944087, 944090, 944091, 944094, 944110, 944112, 944116, 944118, 944128, 944134, 944138, 944141, 944143, 944145, 944150, 944153, 944154, 944158, 944160, 944163, 944164, 944166, 944170, 944176, 944178, 944179, 944180, 944181, 944183, 944184, 944196, 944202, 944205, 944207, 944209, 944210, 944218, 944223, 944226, 944229, 944231; also used on Model 81700 Series type Nos. 0110, 0115, 0118, 0128, 0131, 0132, 0135, 0136, 0137, 0143, 0144, 0149, 0151, 0156, 0157, 0160, 0161, 944510, 944511, 944512, 944514, 944524, 944541, 944542, 944543, 944556, 944561, 944564, 944565, 944571, 944574, 944575, 944577, 944585, 944587,

REF. NO.	PART NO.	DESCRIPTION
		944588, 944589, 944597, 944599, 944600, 944601, 944603, 944609, 944613, 944627, 944630, 944631, 944632, 944633, 944634, 944637, 944639, 944646, 944647, 944650, 944655, 944657, 944659, 944661, 944663, 944666, 944675, 944676, 944679, 944680, 944681, 944683, 944684, 944686, 944689, 944692, 944693, 944695, 944696, 944697, 944701, 944704, 944707, 944708, 944709, 944715, 944716, 944718, 944722, 944723, 944724, 944726, 944731, 944732, 944734, 944735, 944737, 944746, 944747, 944748, 944749, 944750, 944751, 944753, 944765, 944767, 944768, 944769, 944770, 944774, 944776, 944782, 944785, 944786, 944788, 944790, 944791, 944795, 944797, 944799, 944800, 944803, 944804, 944805, 944807, 944808, 944813, 944823, 944830, 944833, 944836, 944837.
142	**†294481**	Nozzle–Carburetor
143	**†294473**	Valve–Needle
144	**260256**	Spring–Needle Valve
145	**294714**	Carburetor Overhaul Kit
160	**294872**	Cleaner Assembly–Air (with mounting stud)
161	**293991**	Bowl–Air Cleaner
162	**294802**	Cover and Filter–Air Cleaner (with mounting stud)
163	***27660**	Gasket–Air Cleaner Mtg.
171	**92129**	Nut–Hex.–1/4-28
172	**27795**	Gasket–Air Cleaner
180	**293514**	Tank Assembly–Fuel
	Note:	**290816** Tank Assy.–Fuel Used on Model 80700 Series type Nos. 944193, 944226.

† Included in Carburetor Overhaul Kit–Part No. 294714

www.mymowerparts.com

For Briggs & Stratton Discount Parts Call 606-678-9623 or 606-561-4983

80700 To 80797
81700 To 81797

REF. NO.	PART NO.	DESCRIPTION
		Uses: **221087** Bracket--Tank, Left Hand **221088** Bracket--Tank, Right Hand **291367** Strap--Tank (2) Uses: **90970** Nut **91257** Screw
181	293270	Cap--Fuel Tank
	Note:	**69221** Cap–Fuel Tank Used on Model 80700 Series type Nos. 944193, 944226.
186	66111	Connector–Fuel Pipe
187	294539	Pipe--Fuel
198	293934	Valve--Fuel Shut-Off
199	292797	Outlet–Fuel Tank (includes strainer)
200	294617	Blade--Governor (Used before Serial No. 6212310)
200A	297309	Blade–Governor (Used before Serial No. 6212310)
	Note:	**294617** Blade–Governor Used on Model 80700 Series type No. 0149.
210	260136	Spring–Choke Return (Choke-A-Matic)
211	260137	Link–Choke Return (Choke-A-Matic)
213	260120	Link--Governor
214	260179	Spring–Governor
	Note:	**260261** Spring–Governor Used on Model 80700 Series type Nos. 944119, 944136, 944255; also used on Model 81700 Series type Nos. 944645, 944656, 944793. **260605** Spring–Governor (for 3200 to 3400 rpm top speed set – no load) Used before Serial No. 6212310 on Model 80700 Series type Nos. 944228, 944230, 944236, 944238, 944239, 944245; also used on Model 81700 Series type Nos. 944562, 944720, 944762, 944763, 944802, 944809, 944810, 944824. **260715** Spring–Governor (for 3200 to 3400 rpm top speed – no load) Used on and after Serial No. 6212310 on Model 80700 Series type Nos. 0019, 0021, 0030, 0031, 0040, 0043, 0044, 0140, 0141, 0149, 0150, 0153, 0158, 0162, 0165, 0168, 0169, 0170, 0171, 944168, 944220, 944228, 944230, 944236, 944238, 944239, 944245, 944257, 944260, 944263, 944264, 944265; also used on Model 81700 Series type Nos. 0147, 0152, 0153, 0154, 0155, 0159, 0165, 0167, 944562, 944720, 944762, 944763, 944802, 944809, 944810, 944822, 944824, 944834, 944835.
264	90355	Nut–Hex.–No. 10-32
265	220796	Clamp–Remote Control Casing
268	66986	Casing–Control Wire–48" long
	Note:	If longer casing is needed, specify length in inches; if a shorther casing is needed order No. 66986 and cut to required length.
269	26099	Wire–Control–54" long
	Note:	If longer wire is needed, specify length in inches; if shorter wire is needed order No. 26099 and cut to required length.
270	63426	Locknut–Control Wire Casing
271	290568	Lever Assembly–Control
272	290584	Base–Control Lever
273	290642	Lever–Control
274	91237	Washer–Lock–¼ x 3/32 x 5/64"
275	92287	Screw–Machine, Rd. Hd.–10-32 x ¼"
276	22834	Washer–Spacer
277	22368	Washer–Control Lever
278	22725	Washer–Control Lever
279	92306	Screw–Cap, Hex. Hd.–¼-28 x 5/8"
282	93106	Screw–Speed Control Mounting Sem
283	294946	Control--Speed (Used with Choke-A-Matic remote control)
	Note:	**294817** Control–Speed (Manual Choke) Used on Model 80700 Series type Nos. 0010, 0015, 0016, 0017, 0018, 0020, 0040, 0041, 0042, 0110, 0115, 0118, 0128, 0133, 0136, 0143, 0158, 0159, 0166, 0167, 0171, 0172, 0173, 944010, 944011, 944012, 944014, 944016, 944020, 944022, 944023, 944024, 944025, 944026, 944028, 944029, 944030, 944032, 944035, 944037, 944038, 944040, 944041, 944047, 944051, 944060, 944063, 944064, 944075, 944078, 944083, 944087, 944090, 944091, 944094, 944110, 944112, 944116, 944118, 944128, 944134, 944138, 944141, 944143, 944145, 944150, 944153, 944154, 944158, 944160, 944163, 944164, 944166, 944170, 944176, 944178, 944179, 944180, 944181, 944183, 944184, 944196, 944202, 944205, 944207, 944209, 944210, 944218, 944223, 944226, 944229, 944231; also used on Model 81700 Series type Nos. 0110, 0115, 0118, 0128, 0131, 0132, 0135, 0136, 0137, 0143, 0144, 0149, 0151, 0156, 0157, 0160, 0161, 944510, 944511, 944512,

www.mymowerparts.com

For Briggs & Stratton Discount Parts Call 606-678-9623 or 606-561-4983

REF. NO.	PART NO.	DESCRIPTION
		944514, 944524, 944541, 944542, 944543, 944556, 944561, 944564, 944565, 944571, 944574, 944575, 944577, 944585, 944587, 944588, 944589, 944597, 944599, 944600, 944601, 944603, 944609, 944613, 944627, 944630, 944631, 944632, 944633, 944634, 944637, 944639, 944646, 944647, 944650, 944655, 944657, 944659, 944661, 944663, 944666, 944675, 944676, 944679, 944680, 944681, 944683, 944684, 944686, 944689, 944692, 944693, 944695, 944696, 944697, 944701, 944704, 944707, 944708, 944709, 944715, 944716, 944718, 944722, 944723, 944724, 944726, 944731, 944732, 944734, 944735, 944737, 944746, 944747, 944748, 944749, 944750, 944751, 944753, 944765, 944767, 944768, 944769, 944770, 944774, 944776, 944782, 944785, 944786, 944788, 944790, 944791, 944795, 944797, 944799, 944800, 944803, 944804, 944805, 944807, 944808, 944813, 944823, 944831, 944833, 944836, 944837.
		298291 Control–Speed (Manual Choke) Used on Model 80700 Series type Nos. 0142, 0160.
284	**93108**	Screw–Clamp Mounting
297	**91811**	Locknut–Exhaust Elbow
298	**220859**	Locknut–Muffler
299	**294441**	Muffler–Exhaust (Lo-Tone)
300	**89966**	Muffler–Exhaust
	Note:	**292054** Muffler–Exhaust Used on Model 80700 Series type Nos. 0162, 944040, 944205, 944260; also used on Model 81700 Series type Nos. 944569, 944608, 944795, 944798, 944800, 944830.
		295905 Muffler–Exhaust Used on Model 80700 Series type Nos. 0150, 944162, 944221; also used on Model 81700 Series type Nos. 0159, 0165, 944576, 944581, 944590, 944712, 944714, 944834, 944835.
303	**91810**	Elbow–Exhaust–(45° Street)
	Note:	**91943** Elbow–Exhaust (90° Street) Used on Model 80700 Series type Nos. 0153, 0161, 944024, 944083, 944184, 944192, 944228, 944238, 944242, 944253; also used on Model 81700 Series type Nos. 944567, 944608, 944746, 944802, 944816.
304	**295627**	Blower Housing with Fuel Tank (For Rewind Starter) (For Blower and Rewind Starter Housing for screw mounted tank used on engines before Serial No. 5808060, order Part No. 294271)
	Note:	**294268** Housing–Blower (For Rope Starter) Used on Model 80701, 81701 Series.
		295329 Blower Hsg. and Brackets Assy. with Fuel Tank (For Electric Starter) (For Blower Housing and Brackets Assy. – Electric Starter for screw mounted tank used on engines before Serial No. 5808060 order Part No. 295727) Used on Model 80703, 80793, 81703, 81793 Series.
		295628 Blower Housing with Fuel Tank (For Rewind Starter) (For Blower and Rewind Starter Housing for screw mounted tank used on engines before Serial No. 5808060 order Part No. 294657) Used on Model 80700 Series type Nos. 0021, 0044, 0140, 0155, 944019, 944021, 944031, 944033, 944042, 944043, 944045, 944046, 944050, 944055, 944056, 944057, 944061, 944071, 944076, 944077, 944079, 944087, 944088, 944089, 944093, 944099, 944104, 944105, 944106, 944107, 944111, 944113, 944114, 944115, 944117, 944121, 944129, 944135, 944142, 944156, 944161, 944169, 944174, 944175, 944236, 944268; also used on Model 81700 Series type Nos. 0144, 0150, 0159, 0165, 944517, 944522, 944523, 944525, 944534, 944535, 944536, 944539, 944540, 944553, 944554, 944555, 944557, 944572, 944573, 944574, 944576, 944578, 944582, 944584, 944586, 944590, 944593, 944595, 944598, 944604, 944605, 944606, 944607, 944610, 944611, 944612, 944614, 944619, 944620, 944621, 944622, 944624, 944626, 944634, 944640, 944642, 944643, 944651, 944652, 944653, 944666, 944670, 944671, 944709, 944715, 944718, 944730, 944768, 944796, 944834, 944835.
		295631 Blower Housing with Fuel Tank (For Rewind Starter)

www.mymowerparts.com

For Briggs & Stratton Discount Parts Call 606-678-9623 or 606-561-4983

80700 To 80797
81700 To 81797

REF. NO.	PART NO.	DESCRIPTION
		(For Blower and Rewind Starter Housing for screw mounted tank used on engines before Serial No. 5808060 order Part No. 294277) Used on Model 80700 Series type Nos. 0018, 0041, 0158, 0159, 0165, 0167, 0171, 944026, 944030, 944040, 944044, 944048, 944063, 944066, 944072, 944078, 944083, 944085, 944090, 944091, 944092, 944096, 944097, 944116, 944126, 944127, 944128, 944131, 944154, 944180, 944183, 944220, 944229, 944262; also used on Model 81700 Series type Nos. 0133, 0138, 0158, 0160, 944538, 944567, 944570, 944596, 944608, 944628, 944633, 944644, 944648, 944649, 944658, 944660, 944677, 944702, 944732, 944748, 944751, 944752, 944772, 944789, 944795, 944798, 944837.
		295634 Blower Housing with Fuel Tank (For Rewind Starter) Used on Model 80700 Series type Nos. 944098, 944123, 944178, 944232; also used on Model 81700 Series type Nos. 944559, 944618, 944728.
		295635 Blower Housing with Fuel Tank (For Rewind Starter) (For Blower and Rewind Starter Housing for screw mounted tank used on engines before Serial No. 5808060 order Part No. 295061) Used on Model 80700 Series type Nos. 944034, 944036, 944101.
		295639 Blower Housing with Fuel Tank (For Rewind Starter) Used on Model 80700 Series type No. 944162; also used on Model 81700 Series type No. 944764.
		296113 Blower Housing with Fuel Tank (For Rewind Starter) Used on Model 80700 Series type No. 944144; also used on Model 81700 Series type No. 944674.
		296324 Blower Housing with Fuel Tank (For Wind-Up Starter) (Also see Part No. 297467) Used on Model 80706, 80796, 81706, 81796 Series engines.
		296940 Housing—Blower with Fuel Tank (For Rewind Starter) Used on Model 81700 Series type Nos. 0143, 0146, 0156, 0168, 944771, 944791, 944820, 944833.
		297231 Housing—Blower (For Rewind Starter) Used on Model 80700 Series type Nos. 0146, 944217; also used on Model 81700 Series type Nos. 0147, 944793, 944802.
		297467 Housing—Blower (For Wind-Up Starter) Used on Model 80700 Series type Nos. 0152, 944225, 944237.
305	93158	Screw—Tank and Blower Housing Mounting Sem
	Note:	**92666** Screw—Cap, Hex. Hd. —1/4-20 x 1/2" **92778** Washer—Lock Used on Model 80700 Series type Nos. 0149, 944143, 944168 to mount the Blower Housing.
306	220478	Shield—Cylinder
307	93042	Screw—Cylinder Shield Mounting Sem
308	220581	Cover—Cylinder Head
	Note:	**220354** Cover—Cyl. Head Used on type No. 944060.
309	295188	Motor—Electric Starter
310	93239	Bolt—Case
311	295697	Brush—Starter Motor
312	260404	Spring—Brush
321	210711	Pulley—Electric Starter
	Note:	When ordering this pulley, order No. 67238 Vee—Belt also.
323	67238	Vee—Belt
	Note:	**67028** Vee—Belt Used on engines before Serial No. 5903020.
324	220648	Screen—Electric Starter
325	293959	Starter Pulley with Screen
328	221039	Guard—Belt
329	93014	Screw—Belt Guard Mounting Sem
330	29878	Rope—Starter
331	62577	Washer—Flywheel
332	91708	Nut—Flywheel
333	291617	Armature—Magneto (Std.) (Used before Serial No. 6212310)
	Note:	**295680** Armature—Magneto Used on Model 80700 Series type Nos. 0149, 944143, 944168. Uses: **66298** Bushing—Terminal **92704** Terminal **295179** Shielding—Ignition Cable
333A	297307	Armature—Magneto (Used on and after Serial No. 6212310)
334	93381	Screw—Armature Mtg. Sem
335	93381	Screw—Coil Lead and Armature Mounting Sem
336	292149	Cable—Ignition (Std.) (Used before Serial No. 6212310)
	Note:	**293141** Cable—Ignition Used on type Nos. 944143, 944168 before Serial No.

www.mymowerparts.com

For Briggs & Stratton Discount Parts Call 606-678-9623 or 606-561-4983

REF. NO.	PART NO.	DESCRIPTION
		6008020; after this Serial Number, Cable is part of Coil.
		294577 Cable–Ignition (Shielded) Used before Serial No. 6212310 on type Nos. 944192, 944238.
337	**29693**	Plug–Spark (with Gasket)
	Note:	**292519** Plug–Spark Used on Model 80700 Series type Nos. 0149, 944143, 944168.
		293918 Plug–Spark Used on Model 80700 Series type Nos. 0146, 0147, 944119, 944136, 944217, 944255; also used on Model 81700 Series type Nos. 944645, 944656, 944793.
338	**29806**	Gasket–Spark Plug
340	**26018**	Spring–Breaker Arm
341	**93381**	Screw–Contact Finger Post Mounting Sem
342	**65704**	Plunger–Breaker Point
344	**93042**	Screw–Condenser Clamp Mounting Sem
345	**220366**	Cover–Breaker Point and Condenser
346	**93014**	Screw–Dust Cover Mounting Sem
347	**220884**	Switch–Stop
	Note:	**293739** Switch–Stop Used on type No. 944209.
348	**66898**	Block–Switch
349	**220902**	Blade–Switch
356	**296185**	Wire–Ground
358	**297275**	Gasket Set
359	**93149**	Screw–Machine, Rd. Hd. –5-40 x 3/8"
360	**93150**	Nut–Square–5-40
361	**91432**	Screw–Machine, Fill. Hd. –10-32 x 7/8"
362	**291630**	Shield–Spark Plug
	Note:	**66538** Elbow–Spark Plug Used on Model 80700 Series type Nos. 0139, 0157, 0174, 944049, 944155, 944162, 944191, 944203, 944209, 944251, 944252, 944254; also used on Model 81700 Series type Nos. 0158, 944579, 944738, 944743, 944821.
363	**19069**	Puller–Flywheel (Optional Accessory)
364	**295698**	Plug–Connector
365	**93241**	Screw–Plug Mtg. (long)
366	**93240**	Screw–Plug Mtg. (short)
370	**66432**	Washer–Flat
371	**260275**	Restrictor–Belt
372	**220477**	Clamp–Condenser
373	**92987**	Nut–Condenser Terminal
374	**92813**	Washer–Lock–Shakeproof
375	**294628**	Breaker Points and Condenser Set
	Note:	**293999** Wire–Condenser Ground
		92791 Washer–Lock–Shakeproof (2)
		90576 Nut–Hex. –8-32
		90072 Screw–Machine, Rd. Hd. –8-32 x 5/8"
		66895 Insulator–Term. Used on Model 80700 Series type No. 944083; also used on Model 81700 Series type No. 944655.
		293999 Wire–Condenser Ground
		92791 Washer–Lock–Shakeproof (2)
		90576 Nut–Hex. 8-32
		90072 Screw–Machine, Rd. Hd. –8-32 x 5/8"
		66935 Insulator–Term. Used on Model 80700 Series type No. 944143.
377	**93065**	Key–Woodruff No. 505
383	**89838**	Wrench–Spark Plug
406	**260255**	Spring–Breather Tube
407	**220918**	Crown–Blower Housing
	Note:	**220928** Crown–Blower Hsg. (less sector hole) Used on Model 80700 Series type Nos. 0132, 0137, 944031, 944048, 944052, 942055, 944056, 944067, 944072, 944074, 944077, 944079, 944098, 944115, 944123, 944129, 944171, 944172, 944178, 944180, 944181, 944186, 944236, 944239; also used on Model 81700 Series type Nos. 0133, 0134, 0137, 0158, 0160, 0161, 944515, 944516, 944517, 944521, 944523, 944526, 944527, 944531, 944532, 944534, 944535, 944549, 944557, 944561, 944564, 944565, 944570, 944585, 944588, 944597, 944598, 944619, 944620, 944625, 944630, 944631, 944632, 944639, 944642, 944643, 944648, 944650, 944657, 944658, 944660, 944675, 944677, 944690, 944691, 944693, 944694, 944699, 944700, 944705, 944706, 944710, 944715, 944716, 944717, 944720, 944721, 944735, 944794, 944811, 944813, 944837.
408	**93157**	Screw–Self-Tapping
409	**294930**	Crown Sector and Lever Assembly
	Note:	**294931** Crown Sector and Lever Assembly Used on Model 80700 Series type Nos. 0019, 0145, 0169, 0174, 944027, 944049, 944081, 944085, 944086, 944092, 944152, 944185, 944187, 944188, 944191, 944214, 944245; also used on Model 81700 Series type Nos. 0148, 0154, 0162, 0163, 0167, 944530, 944551, 944566, 944616, 944617, 944654, 944711, 944738, 944743, 944781, 944784, 944822, 944838, 944839.

www.mymowerparts.com

For Briggs & Stratton Discount Parts Call 606-678-9623 or 606-561-4983

80700 To 80797
81700 To 81797

REF. NO.	PART NO.	DESCRIPTION
410	260184	Link Speed Control
455	296455	Cup, Hub and Spring Assy.
	Note:	296327 Cup and Spring Assembly Used on earlier model engines.
456	221222	Plate Retainer
457	296264	Hub and Spring Assembly Used on earlier model engines.
458	296251	Handle Assy. –Cranking
459	221332	Pawl–Ratchet (Single Acting)
	Note:	221220 Pawl Ratchet (Double Acting) Used on earlier model engines.
460	93272	Retainer Ratchet Pawl
461	93298	Screw Handle Mounting
462	221237	Washer–Handle Mounting
463	296445	Holder Assy. –Flywheel
464	93291	Rivet–Holder Assembly Mounting (2)
465	221226	Washer–Holder Assembly Mounting (2)
466	93272	Retainer–Holder Control Knob
467	211017	Knob–Control
508	93294	Screw Blower Housing Mounting Sem
513	296567	Clutch Assy. –Electric Starter
515	260537	Spring–Ratchet Pawl
516	260374	Spring–Connector (Condenser Post)
521	297973	Shielding–Ignition Cable Used after Serial No. 6212310 on cables integral with ignition coil on type Nos. 944192, 944238.
534	93324	Screw–Air Cleaner
	Note:	230058 Stud–Air Cleaner 92067 Nut–Wing 90355 Nut–Hex. Used on Model 80700 Series type No. 0166.
535	27987	Element–Air Cleaner
	Note:	270067 Element–Air Cleaner Used on Model 81700 Series type No. 0137.
536	296766	Cleaner Assembly–Air
	Note:	297595 Cleaner Assy. – Air Used on Model 81700 Series type No. 0137.
537	27994	Gasket–Air Cleaner
544	296769	Armature–Electric Starter
545	296770	Case Assembly–Long Shaft End
546	296775	Case Assembly–Short Shaft End
547	270025	Washer–Fibre
548	221381	Washer–Thrust (Steel)
665	296768	Oil Minder

www.mymowerparts.com

For Briggs & Stratton Discount Parts Call 606-678-9623 or 606-561-4983

ORIGINAL

BRIGGS & STRATTON

SERVICE PARTS ®

www.mymowerparts.com