For Briggs & Stratton Discount Parts Call 606-678-9623 or 606-561-4983

FORM MS-4252-6/77
REPLACES FORM MS-4252-125
FILE IN SECT. 2 OF SERVICE MANUAL
60700 to 60799
61700 to 61799

Illustrated Parts List

MODEL SERIES

60700 to 60799 61700 to 61799

TYPE NUMBERS
907100 TO 907171
907500 TO 907561

HOW TO FIND THE CORRECT NUMBER OF THE PART YOU NEED

These instructions are to be followed when using a Parts List to determine the correct part for an engine.

• • • • • •

A. Refer to Engine Model, Type and Serial Number that is stamped on the blower housing or name plate of engine. Then use the Illustrated Parts List covering this Model Series.

B. Refer to Illustrated Parts section and compare the old part with illustration. The number on the illustration is the Reference Number. Assemblies include all parts shown in frames. All parts shown in assembly frames on which individual reference numbers are given can be purchased separately.

C. After the Reference Number has been identified, refer to the Numerical Parts List, where Master Part Numbers are listed. THE MASTER PART IS USED ON ALL TYPE NUMBERS EXCEPT THOSE TYPE NUMBERS UNDER "NOTE".

D. If a "Note" appears below the Master Part Number, this means that this part differs from the Master Part for certain types. If the Type Number is listed under "Note" order the part referred to.

E. If the Engine Type Number does not appear after any part number listed under "Note", use the Master Part Number.

F. For Type Numbers higher than those covered by this book, please refer to the factory if you are unable to identify the part by comparison.

PRINTED IN U.S.A.

ORIGINAL BRIGGS & STRATTON SERVICE PARTS®

©Copyright

www.mymowerparts.com

For Briggs & Stratton Discount Parts Call 606-678-9623 or 606-561-4983

60700 To 60799
61700 To 61799

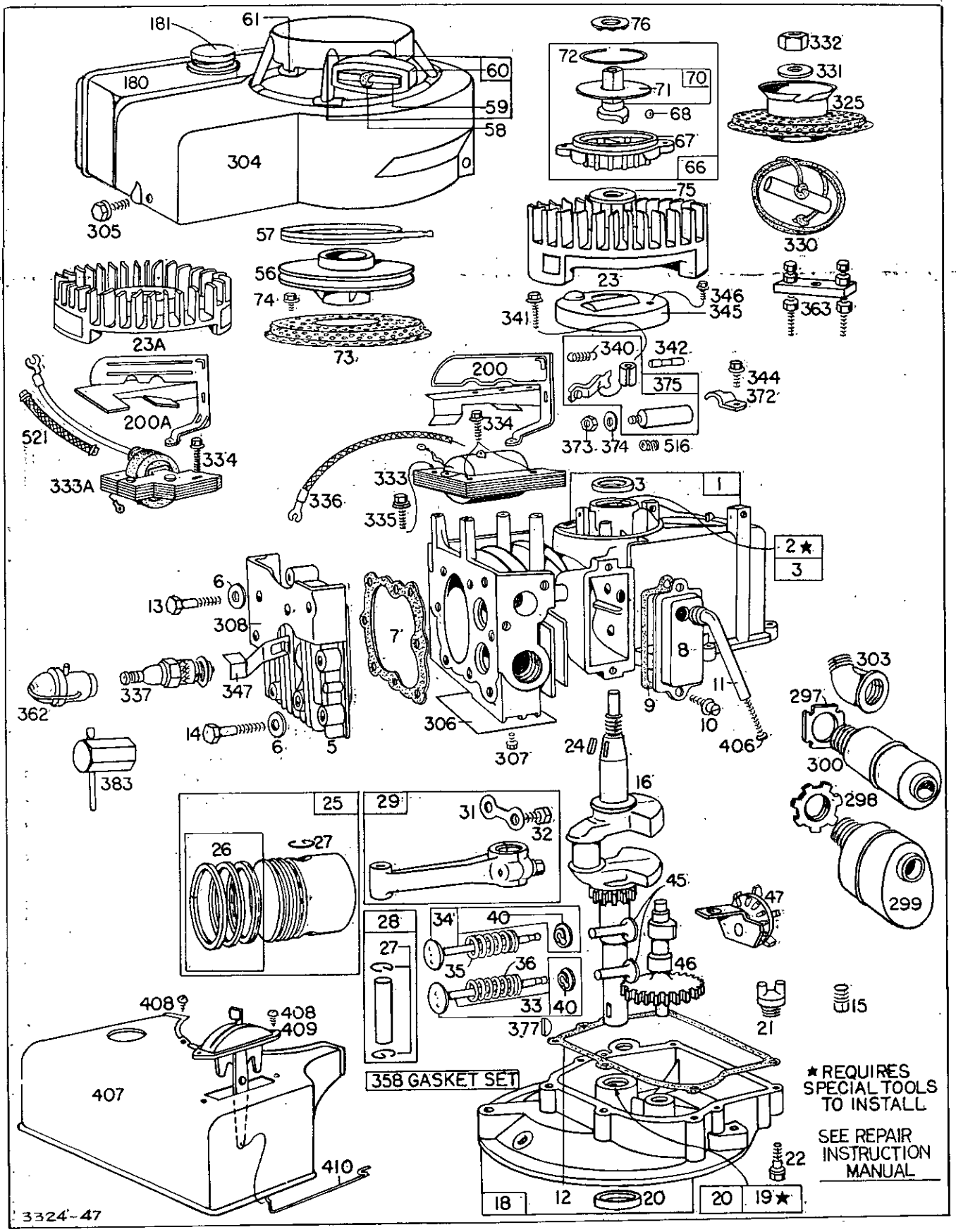

Assemblies include all parts shown in frames.

www.mymowerparts.com

For Briggs & Stratton Discount Parts Call 606-678-9623 or 606-561-4983

60700 To 60799
61700 To 61799

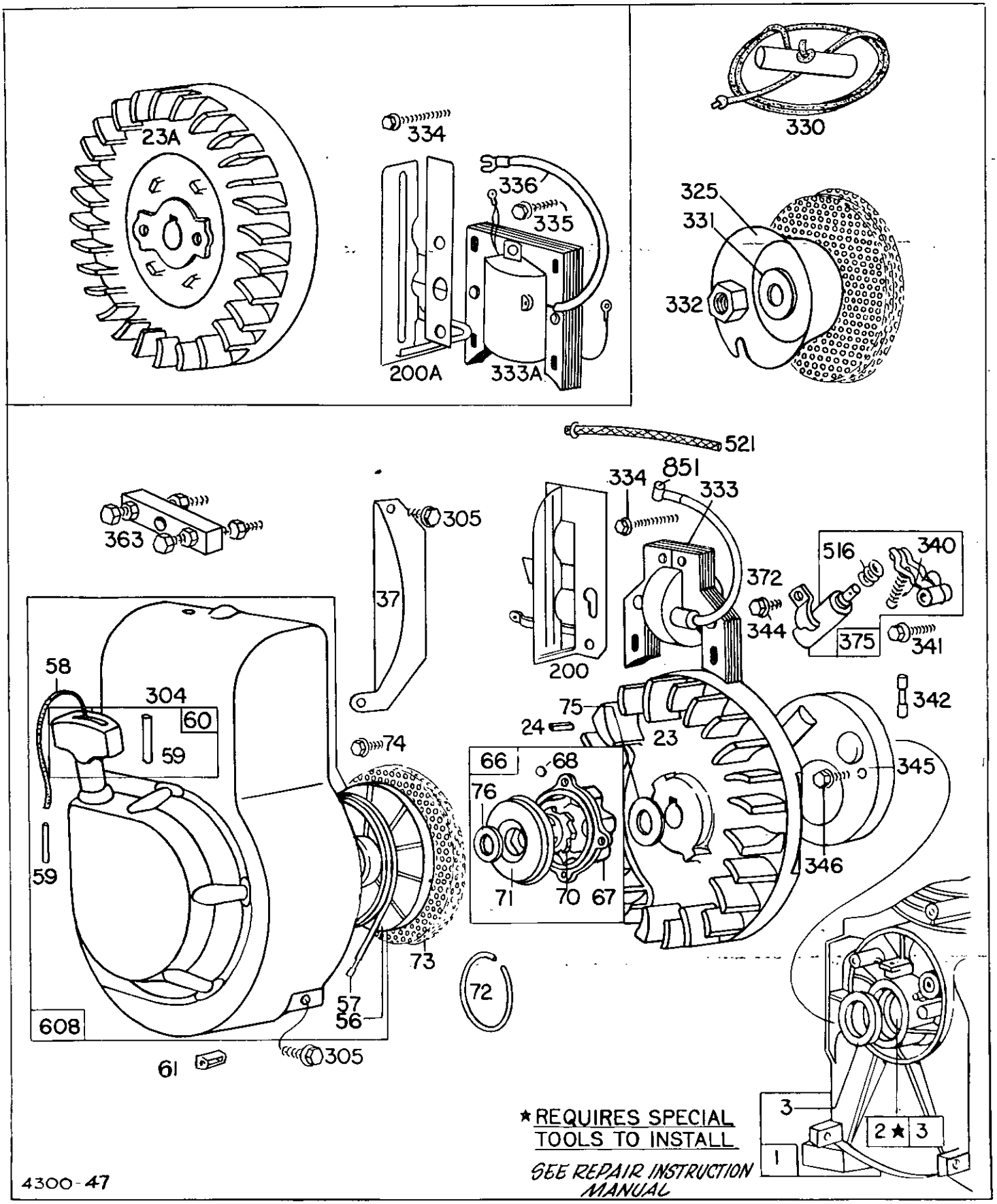

Assemblies include all parts shown in frames.

www.mymowerparts.com

For Briggs & Stratton Discount Parts Call 606-678-9623 or 606-561-4983

60700 To 60799
61700 To 61799

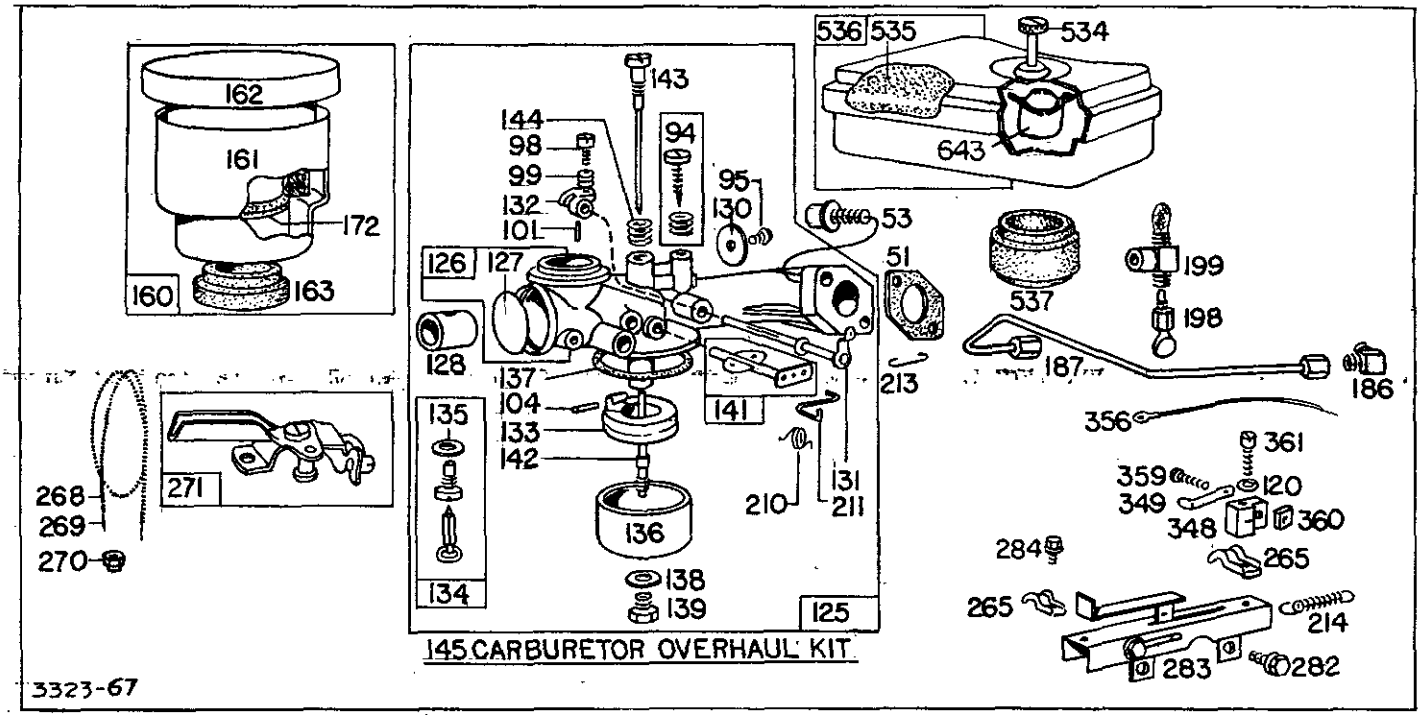

145 CARBURETOR OVERHAUL KIT

3323-67

Assemblies include all parts shown in frames.

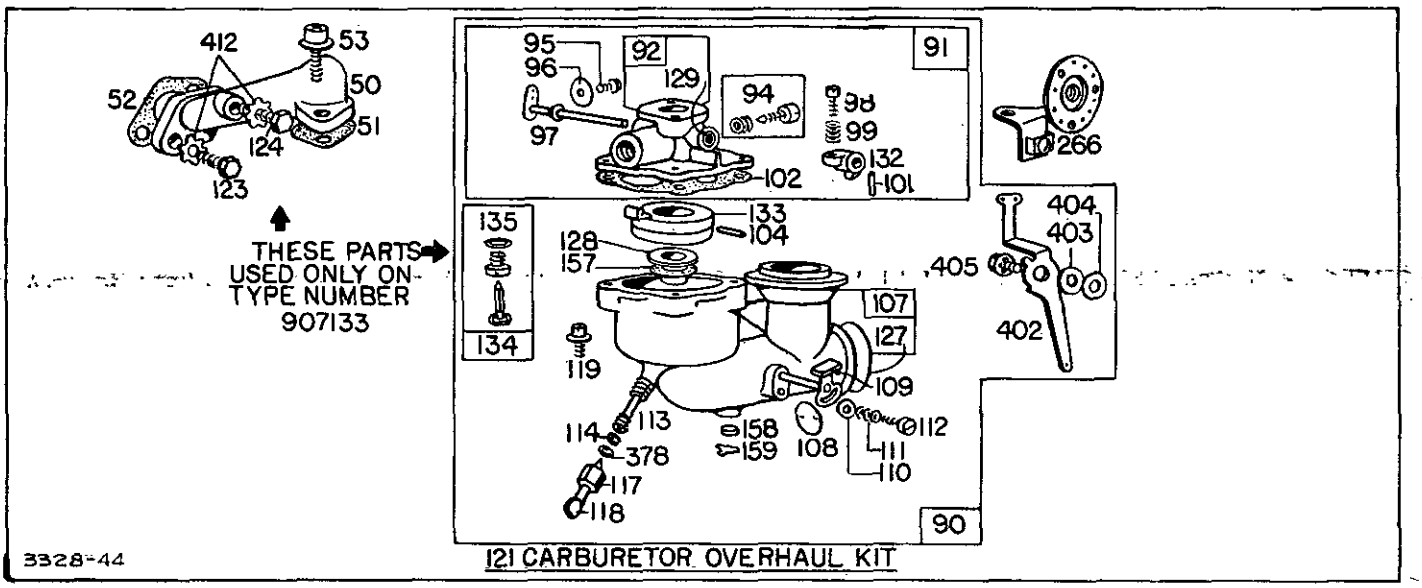

121 CARBURETOR OVERHAUL KIT

3328-44

Assemblies include all parts shown in frames.

www.mymowerparts.com

For Briggs & Stratton Discount Parts Call 606-678-9623 or 606-561-4983

REF. NO.	PART NO.	DESCRIPTION
1	295450	Cylinder Assembly Used on Model 60700 Series after Serial No. 5809080.
	Note:	293511 Cylinder Assy. Used on Model 60700 Series before Serial No. 5809090.
	296802	Cylinder Assembly Used on Model 61700 Series after Serial No. 5809280.
	Note:	295484 Cylinder Assy. Used on Model 61700 Series before Serial No. 5809290.
2	293708	Bushing–Cylinder
	Note:	Requires special tools for installation.
3	89660	Seal–Oil
5	210812	Head–Cylinder
	Note:	210209 Head–Cylinder Used on Model 60700 Series before Serial No. 5809090. Used on Model 61700 Series before Serial No. 5809290.
6	22963	Washer–Plain
7	*27670	Gasket–Cylinder Head
8	292833	Breather–Valve Chamber
9	*27549	Gasket–Valve Cover
10	93394	Screw–Breather Mtg. Sem
11	66698	Tube–Breather
	Note:	66578 Grommet–Breather Cover Used on type No. 907133.
12	*27586	Gasket–Crankcase–.015" thick (Standard)
	*27617	Gasket–Crankcase–.005" thick
	*27618	Gasket–Crankcase–.009" thick
13	91386	Screw–Cylinder Head (2" long)
14	92674	Screw–Cylinder Head (2-3/8" long)
15	91084	Plug–Oil Drain
	Note:	93418 Plug–Oil Drain (Hex. Socket Head)
		Used on type Nos. 907119, 907128, 907129, 907553.
16	260274	Crankshaft
	Note:	26978 Crankshaft Used on type Nos. 907126, 907133, 907170, 907546.
		26989 Crankshaft Used on type Nos. 907117, 907549.
		260003 Crankshaft Used on type Nos. 907129, 907168, 907523, 907524, 907553.
		260005 Crankshaft Used on type Nos. 907115, 907124, 907125, 907128, 907134, 907137, 907138, 907139, 907143, 907146, 907147, 907148, 907149, 907155, 907161, 907162, 907164, 907166, 907167, 907515, 907519, 907525, 907528, 907530, 907534, 907537, 907538, 907547, 907560.
		260006 Crankshaft Used on type Nos. 907121, 907130, 907159, 907169, 907554.
		260023 Crankshaft Used on type Nos. 907122, 907551.
		260047 Crankshaft Used on type Nos. 907151, 907156, 907160.
		260157 Crankshaft Used on type No. 907140.
		260203 Crankshaft Used on type No. 907152.
		260217 Crankshaft Used on type Nos. 907123, 907541.
		260232 Crankshaft Used on type Nos. 907120, 907550.
		260246 Crankshaft Used on type Nos. 907113, 907116, 907132, 907158, 907548.
		260273 Crankshaft Used on type Nos. 907110, 907112, 907114, 907510, 907512, 907545, 907557.
18	293512	Sump–Oil
	Note:	293597 Sump–Oil Used on type Nos. 907123, 907128, 907541.
19	293709	Bushing–Oil Sump
	Note:	Requires special tools for installation.
20	291841	Seal–Oil
21	66768	Plug–Oil Filler
	Note:	296768 Oil Minder Used on type Nos. 907164, 907166, 907541.
22	93032	Screw–Sump Mtg. Sem
23	293205	Flywheel–Magneto (Used before Serial No. 6212310)
	Note:	295936 Flywheel–Magneto Used (before Serial No. 6212310) on type Nos. 907117, 907128, 907129, 907133, 907159, 907168, 907169, 907523, 907524, 907534, 907540, 907541, 907549, 907553.
23A	297949	Flywheel–Magneto (Used after Serial No. 6212310)
	Note:	296884 Flywheel–Magneto Used (after Serial No. 6212310) on type Nos. 907117, 907128, 907129, 907159, 907169, 907170, 907541, 907560.

* Included in Gasket Set–Part No. 297275.

www.mymowerparts.com

For Briggs & Stratton Discount Parts Call 606-678-9623 or 606-561-4983

REF. NO.	PART NO.	DESCRIPTION
24	61760	Key–Flywheel
25	295587	Piston Assy.–Standard (for 2-3/8" Bore) Used on Model 60700 Series after Serial No. 5809080.
Note:	293400	Piston Assembly–Standard (for 2-5/16" Bore) Used on Model 60700 Series before Serial No. 5809090.
	295455	Piston Assembly–Standard (for 2-3/8" Bore) Used on Model 61700 Series after Serial No. 5809280.
	295479	Piston Assembly–Standard (for 2-5/16" Bore) Used on Model 61700 Series before Serial No. 5809290.
	295588	Piston Assy.–.010" O.S. (for 2-3/8" Bore) Used on Model 60700 Series after Serial No. 5809080.
Note:	293401	Piston Assembly–.010" O.S. (for 2-5/16" Bore) Used on Model 60700 Series before Serial No. 5809090.
	295456	Piston Assembly–.010" O.S. (for 2-3/8" Bore) Used on Model 61700 Series after Serial No. 5809280.
	295480	Piston Assembly–.010" O.S. (for 2-5/16" Bore) Used on Model 61700 Series before Serial No. 5809290.
	295589	Piston Assembly–.020" O.S. (for 2-3/8" Bore) Used on Model 60700 Series after Serial No. 5809080.
Note:	293402	Piston Assembly–.020" O.S. (for 2-5/16" Bore) Used on Model 60700 Series before Serial No. 5809090.
	295457	Piston Assembly–.020" O.S. (for 2-3/8" Bore) Used on Model 61700 Series after Serial No. 5809280.
	295481	Piston Assembly–.020" O.S. (for 2-5/16" Bore) Used on Model 61700 Series before Serial No. 5809290.
	295590	Piston Assembly–.030" O.S. (for 2-3/8" Bore) Used on Model 60700 Series after Serial No. 5809080.
Note:	293403	Piston Assembly–.030" O.S. (for 2-5/16" Bore) Used on Model 60700 Series before Serial No. 5809090.
	295458	Piston Assembly–.030" O.S. (for 2-3/8" Bore) Used on Model 61700 Series after Serial No. 5809280.
	295482	Piston Assembly–.030" O.S. (for 2-5/16" Bore) Used on Model 61700 Series before Serial No. 5809290.
MODEL SERIES 60700 RING SETS:		
26	294232	Ring Set–Standard Piston Used on Model 60700 Series after Serial No. 5809080.
Note:	293506	Ring Set–Standard Piston Used on Model 60700 Series before Serial No. 5809090.
	294224	Ring Set–.010" O.S. Piston Used on Model 60700 Series after Serial No. 5809080.
Note:	293507	Ring Set–.010" O.S. Piston Used on Model 60700 Series.
	294225	Ring Set–020" O.S. Piston Used on Model 60700 Series after Serial No. 5809080.
Note:	293508	Ring Set–.020" O.S. Piston Used on Model 60700 Series before Serial No. 5809090.
	294226	Ring Set–.030" O.S. Piston Used on Model 60700 Series after Serial No. 5809080.
Note:	293509	Ring Set–.030" O.S. Piston Used on Model 60700 Series before Serial No. 5809090.
MODEL 61700 SERIES RING SETS:		
	295657	Ring Set–Standard Piston Used on Model 61700 Series after Serial No. 5809280.
Note:	295649	Ring Set–Standard Piston Used on Model 61700 Series before Serial No. 5809290.
	295658	Ring Set–.010" O.S. Used on Model 61700 Series after Serial No. 5809280.
Note:	295650	Ring Set–.010" O.S. Piston Used on Model 61700 Series before Serial No. 5809290.
	295659	Ring Set–.020" O.S. Piston Used on Model 61700 Series after Serial No. 5809280.

www.mymowerparts.com

For Briggs & Stratton Discount Parts Call 606-678-9623 or 606-561-4983

60700 To 60799
61700 To 61799

REF. NO.	PART NO.	DESCRIPTION
	Note:	**295651** Ring Set–.020" O.S. Used on Model 61700 Series before Serial No. 5809290.
	295660	Ring Set –.030" O.S. Piston Used on Model 61700 Series after Serial No. 5809280.
	Note:	**295652** Ring Set–.030" O.S. Used on Model 61700 Series before Serial No. 5809290.
27	**26062**	Lock–Piston
28	**291925**	Pin Assembly–Piston–Standard
	291926	Pin Assembly–Piston–.005" O.S.
29	**293505**	Rod Assembly–Connecting
31	**220460**	Lock–Connecting Rod Screw
32	**92296**	Screw–Connecting Rod
33	**296676**	Valve–Exhaust
34	**296677**	Valve–Intake
	Note:	**23386** Valve–Intake Used before Serial No. 5809090 on Model 60700 Series and on Model 61700 Series before Serial No. 5809290.
35	**260552**	Spring–Intake Valve
36	**26478**	Spring–Exhaust Valve
40	**93312**	Retainer–Valve Spring Used with valves with groove in stem.
	Note:	**23184** Retainer–Valve Spring **23187** Pin–Valve Spring Retainer Used with valves with hole in stem.
45	**230173**	Tappet–Valve
46	**210453**	Gear–Cam
47	**294652**	Oil Slinger Gear and Bracket
50	**210344**	Elbow–Intake
51	*68987	Gasket–Carb. Mtg.
52	*27355	Gasket–Carb. Mtg.
53	**93353**	Screw–Carb. Mtg.
56	**294088**	Pulley–Rewind Starter
57	**294303**	Spring–Rewind Starter
58	**66384**	Rope–Rewind Starter
	Note:	If longer rope is needed, order No. 66514 and cut to required length.
59	**230228**	Pin–Starter Rope
60	**393152**	Grip–Starter Rope
61	**66528**	Bumper–Starter Pulley
66	**295684**	Clutch Assembly–Rewind and Wind-up Starter
67	**210400**	Housing–Starter Clutch
68	**63770**	Ball–Clutch
70	**296597**	Ratchet–Rewind and Wind-up Starter
71	**221301**	Washer–Clutch Retainer Used with square shank ratchet.
	Note:	**220575** Washer–Clutch Retainer Used with 7 point shank ratchet.
72	**26032**	Spring–Clutch Retainer
73	**220648**	Screen–Starter Pulley
74	**93042**	Screw–Rotating Screen Mounting Sem
75	**220865**	Washer–Spring (Used to lock starter clutch)
76	**66738**	Washer–Ratchet Sealing
78	**93014**	Screw–Pulley Screen Mounting Sem
90	**294348**	Carburetor Assembly
91	**293889**	Body Assembly–Upper Carburetor
92	**99634**	Body–Upper Carburetor
94	†292681	Valve Assembly–Carburetor Idle
95	**93038**	Screw–Choke and Throttle Valve Mounting Sem
96	**22036**	Valve–Throttle
97	**293710**	Shaft and Lever Assembly–Throttle
98	**91920**	Screw–Machine, Fill. Hd.–8-32 x 5/8"
99	†26157	Spring–Throttle Adj.
100	**61967**	Stop–Throttle Lever
101	**93043**	Pin–Throttle Stop
102	‡68857	Gasket–Carburetor Body
104	‡†23114	Pin–Float Hinge
107	**293871**	Body–Lower Carburetor (with breather tube)
108	**220897**	Valve–Choke
109	**294874**	Shaft and Lever Assembly–Choke
110	**220899**	Washer–Choke Lever
111	**26229**	Spring–Choke Lever
112	**23270**	Screw–Choke Lever
113	‡23222	Nozzle–Carburetor
114	‡68887	Packing–Needle Valve
117	‡23227	Nut–Needle Valve Packing
118	**230005**	Valve–Needle
119	**93347**	Screw–Throttle Housing Mounting Sem
120	**92290**	Washer–Lock–No. 10 x 1/16 x 3/64"
121	**291691**	Carburetor Overhaul Kit
123	**90700**	Screw–Cap, Hex. Hd.–1/4-20 x 3/4"
124	**92636**	Screw–Cap, Hex. Hd.–1/4-20 x 2"
125	**294716**	Carburetor Assembly (Choke-A-Matic)
	Note:	**294713** Carburetor Assembly (Manual Choke) Used on type Nos. 907110, 907111, 907112, 907113, 907114, 907115, 907116, 907117, 907118, 907119, 907120, 907121, 907122, 907123, 907124, 907126, 907129, 907130, 907132, 907134, 907135, 907137, 907149, 907152, 907153, 907158, 907159, 907162, 907168, 907169, 907170, 907510, 907511, 907512, 907519, 907521, 907523, 907524, 907527, 907529, 907531, 907532,

* Included in Gasket Set–Part No. 297275.

† Included in Carburetor Overhaul Kit–Part No. 294714.

‡ Included in Carburetor Overhaul Kit–Part No. 291691.

www.mymowerparts.com

For Briggs & Stratton Discount Parts Call 606-678-9623 or 606-561-4983

REF. NO.	PART NO.	DESCRIPTION
		907540, 907541, 907545, 907546, 907547, 907548, 907549, 907550, 907551, 907553, 907554, 907557.
126	294717	Body Assembly–Carburetor (Choke-A-Matic)
	Note:	**294712** Body Assy.–Carburetor (Manual Choke) Used on type Nos. 907110, 907111, 907112, 907113, 907114, 907115, 907116, 907117, 907118, 907119, 907120, 907121, 907122, 907123, 907124, 907126, 907129, 907130, 907132, 907134, 907135, 907137, 907149, 907152, 907153, 907158, 907159, 907162, 907168, 907169, 907170, 907510, 907511, 907512, 907519, 907521, 907523, 907524, 907527, 907529, 907531, 907532, 907540, 907541, 907545, 907546, 907547, 907548, 907549, 907550, 907551, 907553, 907554, 907557.
127	†220751	Plug–Welch
	Note:	**220352** Plug–Welch Used on type No. 907133.
128	210528	Venturi–Carburetor
	Note:	**21216** Venturi–Carburetor Used on type No. 907133.
129	23230	Bushing–Throttle Shaft
130	220791	Valve–Throttle
131	294437	Shaft and Lever Assembly–Throttle
132	61967	Stop–Throttle
133	293477	Float–Carburetor
134	†‡293478	Valve and Seat–Fuel Inlet
135	†‡68877	Gasket–Fuel Inlet Valve
136	220761	Bowl–Float
137	†27682	Gasket–Float Bowl
138	†221172	Washer–Float Bowl Mounting
139	93086	Screw–Carburetor Bowl Mounting
141	297024	Valve, Shaft and Lever Assembly–Choke (Choke-A-Matic)
	Note:	**294874** Valve, Shaft and Lever Assy.–Choke Used on type Nos. 907110, 907111, 907112, 907113, 907114, 907115, 907116, 907117, 907118, 907119, 907120, 907121, 907122, 907123, 907124, 907126, 907129, 907130, 907132, 907134, 907135, 907137, 907149, 907152, 907153, 907158, 907159, 907162, 907168, 907169, 907170, 907510, 907511, 907512, 907519, 907521, 907523, 907524, 907527, 907529, 907531, 907532, 907540, 907541, 907545, 907546, 907547, 907548, 907549, 907550, 907551, 907553, 907554, 907557.
	Uses:	**23270** Screw–Choke Lever (Ref. No. 112) **26229** Spring–Choke Lever (Ref. No. 111) **220886** Valve–Choke **220899** Washer (Ref. No. 110)
142	†294481	Nozzle–Carburetor
143	†294473	Valve–Needle
144	260256	Spring–Needle Valve
145	294714	Carburetor Overhaul Kit
157	68897	Gasket–Carburetor Venturi
158	27590	Filter–Carburetor Drain
159	220521	Retainer–Carburetor Drain
160	294872	Cleaner Assy.–Air (with mounting stud)
	Note:	**294868** Cleaner Assembly–Air (with mounting stud) Used on type No. 907133.
161	293991	Bowl–Air Cleaner
162	294802	Cover and Filter–Air Cleaner (with mounting stud)
	Note:	**294863** Cover and Filter–Air Cleaner (with mounting stud) Used on type No. 907133.
163	27660	Gasket–Air Cleaner Mounting
172	27795	Gasket–Air Cleaner
180		Tank Assy.–Fuel (Not available–Order Blower Housing with Integral Tank–See Ref. No. 304)
	Note:	Fuel Tank on type No. 907139 is furnished by the Equipment Manufacturer.
	Note:	**291488** Tank Assy.–Fuel Used on type Nos. 907534, 907560.
	Uses:	**291490** Strap Assy.–Fuel Tank Includes: **90970** Nut–Square **91257** Screw–Cap, Fil. Hd.–1/4-20 x 1-1/2

† Included in Carburetor Overhaul Kit–Part No. 294714.

‡ Included in Carburetor Overhaul Kit–Part No. 291691

www.mymowerparts.com

For Briggs & Stratton Discount Parts Call 606-678-9623 or 606-561-4983

REF. NO.	PART NO.	DESCRIPTION
181	293270	Cap–Fuel Tank
	Note:	**69221** Cap–Fuel Tank Used on type Nos. 907534, 907560.
186	66111	Connector–Fuel Pipe
	Note:	**92427** Connector–Fuel Pipe Used on type No. 907133.
187	294539	Pipe–Fuel
	Note:	Fuel Pipes on type Nos. 907139, 907534 and 907560 are furnished by the Equipment Manufacturer. **293257** Pipe–Fuel Used on type No. 907133.
198	293934	Valve–Fuel Shut-off
	Note:	**295913** Valve–Fuel Shut-off Used on type No. 907534.
199	292797	Outlet–Fuel Tank (includes strainer)
	Note:	**99910** Filter Assembly–Fuel Used on type Nos. 907534, 907560.
		Uses: **68477** Gasket–Filter Bowl **298683** Bowl–Filter **99665** Yoke–Filter Bowl **99909** Cover Assy.–Filter Includes: **22547** Screen–Filter **53029** Conn.–Fuel Pipe **295913** Valve–Shut-off
200	294617	Blade–Governor (Used before Serial No. 6212310)
	Note:	**293513** Blade–Gov. Used on type No. 907133.
200A	297309	Blade–Governor (Used after Serial No. 6212310)
210	260136	Spring–Choke Return (Choke-A-Matic)
211	260137	Link–Choke Return (Choke-A-Matic)
213	260120	Link–Governor
	Note:	**26941** Link–Governor Used on type No. 907133.
214	260179	Spring–Governor
	Note:	**26925** Spring–Governor Used on type No. 907133. **260715** Spring–Governor Used on type Nos. 907159, 907168.
264	90355	Nut–Hex.–No. 10-32
265	220796	Clamp–Remote Control Casing
266	290062	Control–Throttle
267	93351	Screw–Clamp Mtg.
268	66986	Casing–Control Wire–48" long
	Note:	If longer casing is needed, specify length in inches; if a shorter casing is needed order No. 66986 and cut to required length.
269	26099	Wire–Control, 54" long
	Note:	If longer wire is needed, specify length in inches; if shorter wire is needed order No. 26099 and cut to required length.
270	63426	Locknut–Control Wire Casing
271	290568	Lever Assy.–Control
282	93106	Screw–Speed Control Mounting Sem
283	294946	Control–Speed (Used with Choke-A-Matic remote control)
	Note:	**294817** Control–Speed Used on type Nos. 907110, 907111, 907112, 907113, 907114, 907115, 907116, 907117, 907118, 907119, 907120, 907121, 907122, 907123, 907124, 907126, 907129, 907130, 907132, 907134, 907135, 907137, 907149, 907152, 907153, 907158, 907159, 907162, 907168, 907169, 907170, 907510, 907511, 907512, 907519, 907521, 907523, 907524, 907527, 907529, 907531, 907532, 907540, 907541, 907545, 907546, 907547, 907548, 907549, 907550, 907551, 907553, 907554, 907557.
284	93108	Screw–Clamp Mounting
297	91811	Locknut–Exhaust Elbow
298	220859	Locknut–Muffler
299	294441	Muffler–Exhaust (Lo-Tone)
300	89966	Muffler–Exhaust
	Note:	**292054** Muffler–Exhaust Used on type Nos. 907129, 907132, 907133, 907134, 907540, 907553.
303	91810	Elbow–Exhaust (45° Street)
	Note:	**91812** Elbow–Exhaust (90° Street) Used on type Nos. 907128, 907528.
304	295627	Blower Housing with Fuel Tank (For Rewind Starter)
	Note:	**294260** Housing–Blower (For Rewind Starter) Used on type No. 907534. **294268** Blower Housing with Fuel Tank (For Rope Starter) Used on Model 60701, 61701 Series.

www.mymowerparts.com

For Briggs & Stratton Discount Parts Call 606-678-9623 or 606-561-4983

60700 To 60799
61700 To 61799

REF. NO.	PART NO.	DESCRIPTION
		294282 Housing–Blower (For Rewind Starter) Used on type No. 907139.
		295329 Blower Housing and Brackets Assy. with Fuel Tank (For Electric Starter)
		295628 Blower Housing with Fuel Tank (For Rewind Starter) Used on type Nos. 907131, 907135, 907516, 907518, 907522, 907526, 907555.
		295631 Blower Housing with Fuel Tank (For Rewind Starter) Used on type Nos. 907119, 907132, 907137, 907138, 907141, 907159, 907520.
		295635 Blower Housing with Fuel Tank (For Rewind Starter) Used on type No. 907140.
		296324 Blower Housing with Fuel Tank (For Wind-up Starter) Used on Model 60706 *and 61706 Series* Engines.
		296940 Blower Housing with Fuel Tank (For Rewind Starter) Used on type No. 907168.
305	93158	Screw–Tank and Blower Housing Mounting Sem
306	220478	Shield–Cylinder
307	93042	Screw–Cylinder *Shield Mounting Sem*
308	220581	Cover–Cylinder Head
310	93239	Bolt–Case

‡ Included in Carburetor Overhaul Kit–Part No. 291691.

REF. NO.	PART NO.	DESCRIPTION
311	295697	Brush–Starter Motor
312	260404	Spring–Brush
321	210711	Pulley–Electric Starter
	Note:	When ordering this pulley, Order No. 67238 Vee–Belt also.
323	67238	Vee–Belt
	Note:	**67028** Vee–Belt Used on engines before Serial No. 5903020.
324	220648	Screen–Electric Starter Pulley
325	293959	Starter Pulley with Screen
328	221039	Guard–Belt
329	93014	Screw–Guard Mounting Sem
330	29878	Rope–Starter
331	62577	Washer–Flywheel
332	91708	Nut–Flywheel
333	291617	Armature–Magneto (Used before Serial No. 6212310)
333A	297307	Armature Assembly (Used after Serial No. 6212310)
334	93381	Screw–Armature Mounting Sem
335	93381	Screw–Coil Lead and Armature Mounting Sem
336	292149	Cable–Ignition
	Note:	**294519** Cable–Ignition Used on type No. 907169.
		294577 Cable–Ignition Used on type No. 907128.
337	29693	Plug–Spark (with gasket)
338	29806	Gasket–Spark Plug
340	26018	Spring–Breaker Arm
341	93381	Screw–Contact Flinger Post Mounting Sem
342	65704	Plunger–Breaker Point
344	93042	Screw–Condenser Clamp Mounting Sem
345	220366	Cover–Breaker Point and Condenser
346	93014	Screw–Dust Cover Mounting Sem
347	220884	Switch–Stop

REF. NO.	PART NO.	DESCRIPTION
348	66898	Block–Switch
349	220902	Blade–Switch
356	296185	Wire–Ground
358	297275	Gasket Set
359	93149	Screw–Machine, Rd. Hd. –5 - 40 x 3/
360	93150	Nut–Square–5 - 40
361	91432	Screw–Machine, Fill. Hd. – 10 - 32 x 7/8"
362	291630	Shield–Spark Plug
	Note:	**66538** Elbow–Spark Plug Used on type Nos. 907164, 907166, 907560.
363	19069	Puller–Flywheel (Optional Accesso
364	295698	Plug–Connector
365	93241	Screw–Plug Mounting (long)
366	93240	Screw–Plug Mounting (short)
370	66432	Washer–Plain
371	260275	Restrictor–Belt
372	220477	Clamp–Condenser
373	92987	Nut–Condenser Terminal
374	92813	Washer–Lock–Shakeproof
375	294628	Breaker Points and Condenser Set
	Note:	**293999** Wire–Condenser Ground
		92791 Washer–Loc Shakeproof (2)
		90576 Nut–Hex. – 8 - 32
		90072 Screw–Mac Rd. Hd.–8 - 32 x 5/
		66895 Insulator–Terminal Used on type No. 907133.
377	93065	Key–Woodruff No.
378	‡22032	Washer–Needle Valve Packing
383	89838	Wrench–Spark Plu
402	220542	Lever–Governor Control
403	220543	Washer–Governor Control Lever (Spring Type)

www.mymowerparts.com

For Briggs & Stratton Discount Parts Call 606-678-9623 or 606-561-4983

60700 To 60799
61700 To 61799

REF. NO.	PART NO.	DESCRIPTION
404	22539	Washer–Governor Control Lever
405	93008	Screw–Governor Control Lever Mtg.
406	260255	Spring–Breather Tube
407	220918	Crown–Blower Housing
	Note:	**220928** Crown–Blower Housing (Less sector hole) Used on type Nos. 907131, 907136, 907157, 907515, 907516, 907526, 907527, 907535, 907536, 907538, 907542, 907543, 907555.
408	93157	Screw–Self Tapping
409	294930	Crown Sector and Lever Assembly
	Note:	**294931** Crown Sector and Lever Assembly Used on type Nos. 907125, 907127, 907151, 907160, 907520, 907552.
410	260184	Link–Speed Control
412	93028	Washer–Lock–Shakeproof
455	296455	Cup, Hub and Spring Assy.
	Note:	**296327** Cup and Spring Assy. Used on earlier model engines.
456	221222	Plate–Retainer
457	296264	Hub and Spring Assy. Used on earlier model engines.
458	298431	Handle Assembly–Cranking
459	221332	Pawl–Ratchet (Single Acting)
	Note:	**221220** Pawl–Ratchet (Double Acting) Used on earlier model engines.
460	93272	Retainer–Ratchet Pawl
461	93298	Screw–Handle Mtg.
462	221237	Washer–Handle Mtg.
463	296445	Holder Assembly–Flywheel
464	93291	Rivet–Holder Assy. Mtg. (2)
465	221226	Washer–Holder Assy. Mtg. (2)
466	93272	Retainer–Holder Control Knob
467	211017	Knob–Control
508	93294	Screw–Blower Housing Mounting Sem
513	296567	Clutch Assy.–Electric Starter
515	260537	Spring–Ratchet Pawl
516	260374	Spring–Connector (Condenser Post)
521	297973	Shielding–Ignition Cable (Used on engines with ignition cables molded into coils.)
534	93324	Screw–Air Cleaner
	Note:	**230058** Stud–Air Cleaner **92067** Nut–Wing **90355** Nut–Hexagon Used on type Nos. 907169, 907170.
535	27987	Element–Air Cleaner
536	296766	Cleaner Assy.–Air
537	27994	Gasket–Air Cleaner
544	296769	Armature–Electric Starter
545	296770	Case Assy.–Long Shaft End
546	296775	Case Assy.–Short Shaft End
547	270025	Washer–Fibre
548	221381	Washer–Thrust (Steel)
643	221321	Cup–Air Cleaner
822	297518	Starter Assy.–Wind-Up

www.mymowerparts.com