For Briggs & Stratton Discount Parts Call 606-678-9623 or 606-561-4983

FORM MS−5572−05/19/2005
REPLACES FORM MS−5572−06/12/2004
FILE IN SECT. 2 OF SERVICE MANUAL

Illustrated Parts List

Model Series

40F700

TYPE NUMBERS
0111 and 0112.

TABLE OF CONTENTS

Air Cleaner 5
Alternators/Ignition 7
Blower Housing/Shrouds 5
Camshaft 3
Carburetor 4
Controls 6
Crankshaft 2
Cylinder 2
Cylinder Head 3
Electric Starter 6
Engine Sump 2
Flywheel 6
Kit/Gasket Sets 4
Lubrication 2
Piston, Rings, Connecting Rod 2
Valves 3

BRIGGS & STRATTON ®

PRINTED IN U.S.A.

COPYRIGHT by BRIGGS & STRATTON CORPORATION
All rights reserved. No part of this material may be reproduced or transmitted, in any form or by any means, electronic or mechanical, including photocopying, recording or by any information storage and retrieval system, without permission in writing from Briggs & Stratton Corporation.

www.mymowerparts.com

For Briggs & Stratton Discount Parts Call 606-678-9623 or 606-561-4983

40F700

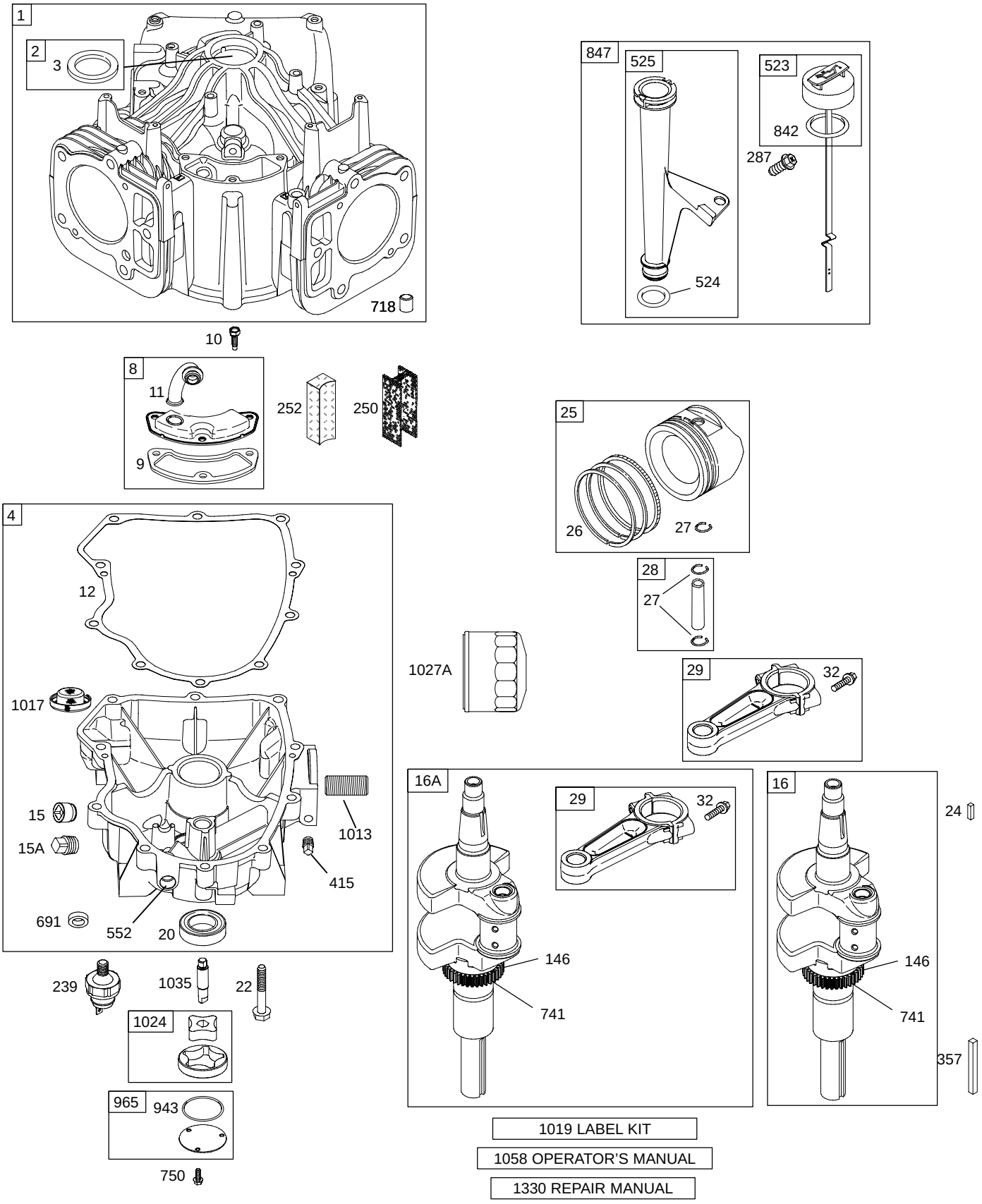

Illustrations cover a range of engines. Parts shown without corresponding text may not be used on your specific engine.

www.mymowerparts.com

For Briggs & Stratton Discount Parts Call 606-678-9623 or 606-561-4983

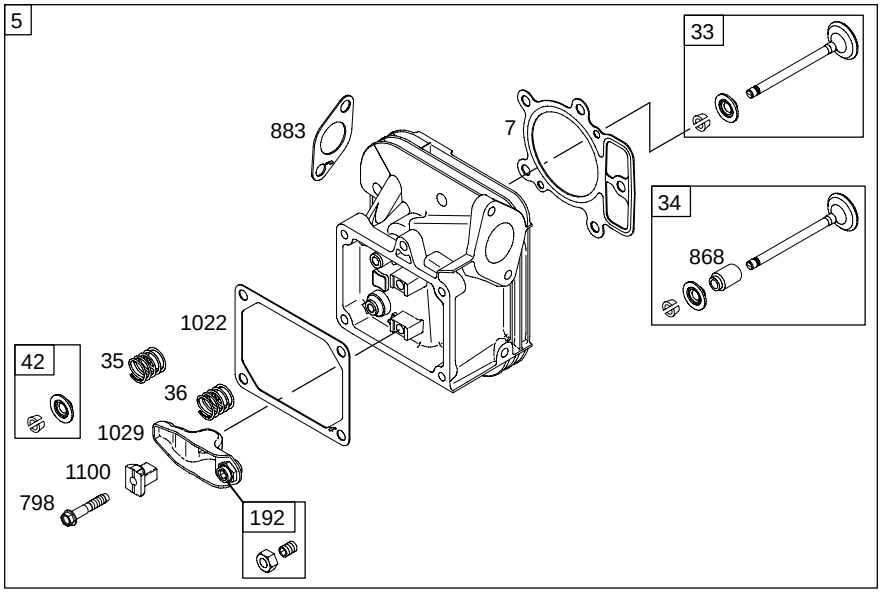

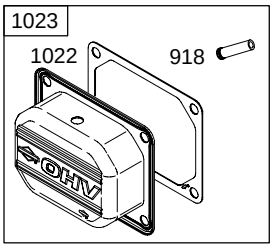

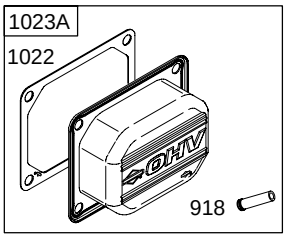

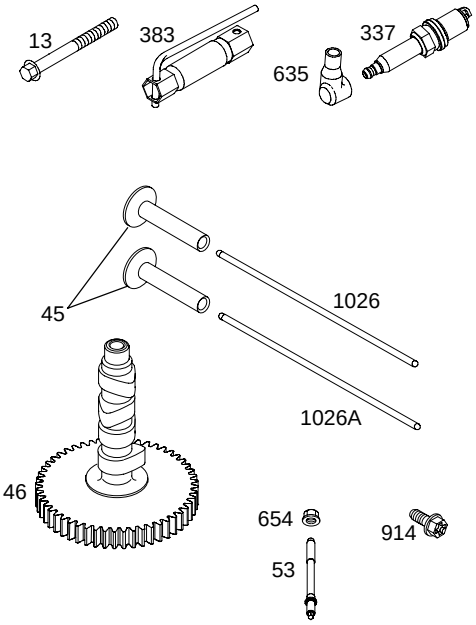

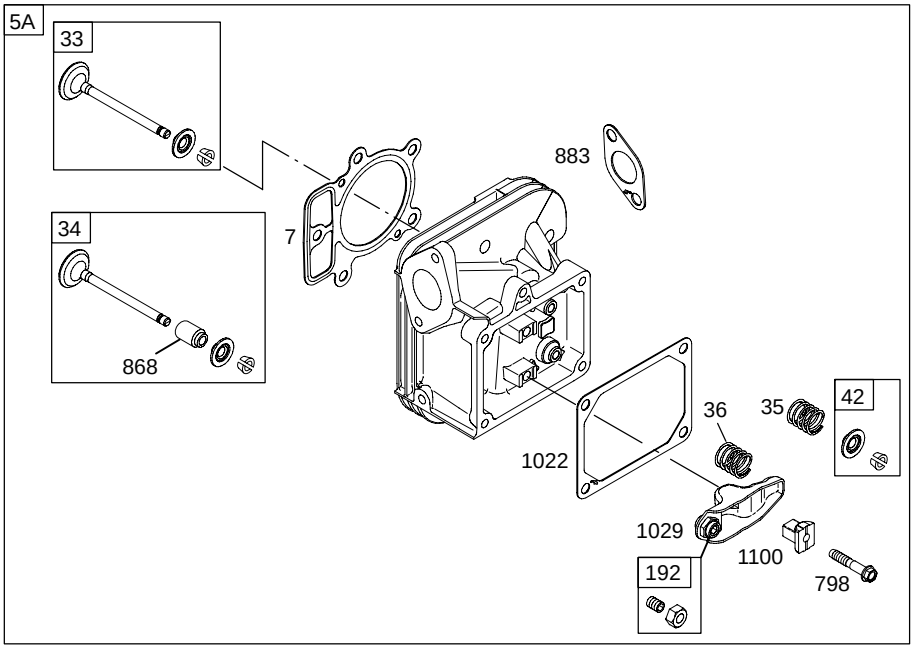

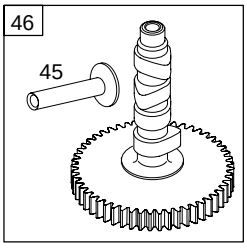

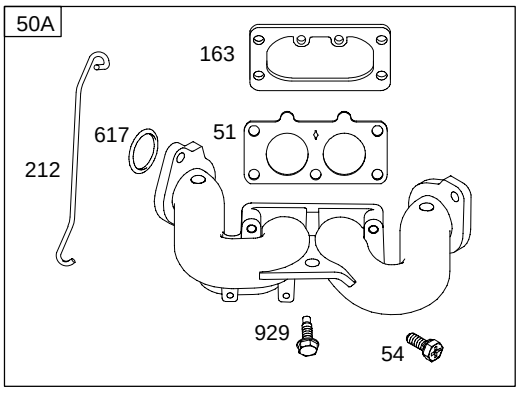

Illustrations cover a range of engines. Parts shown without corresponding text may not be used on your specific engine.

www.mymowerparts.com

For Briggs & Stratton Discount Parts Call 606-678-9623 or 606-561-4983

40F700

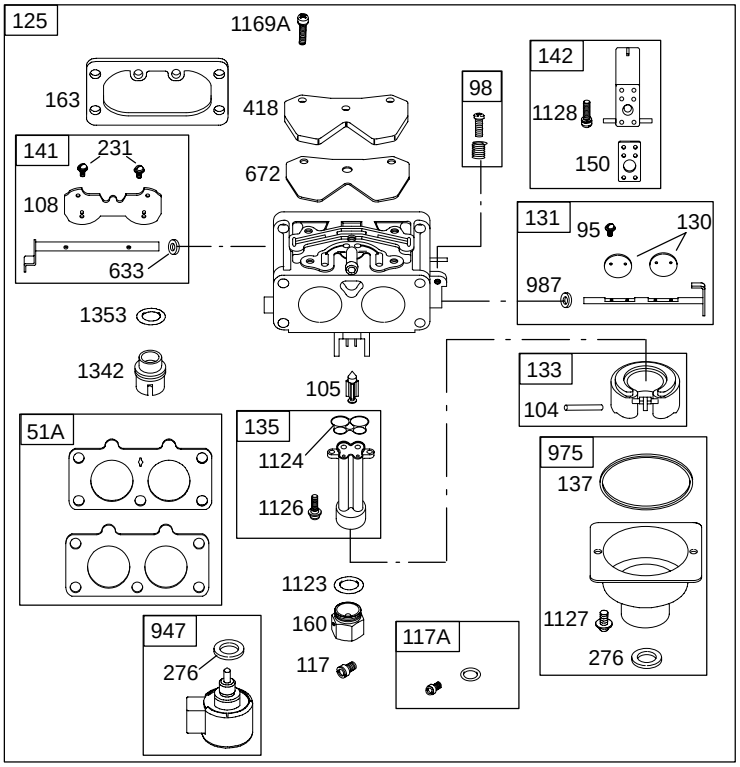

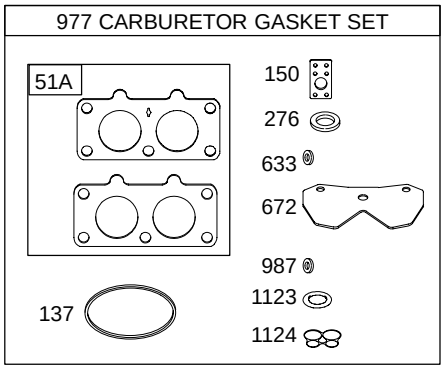

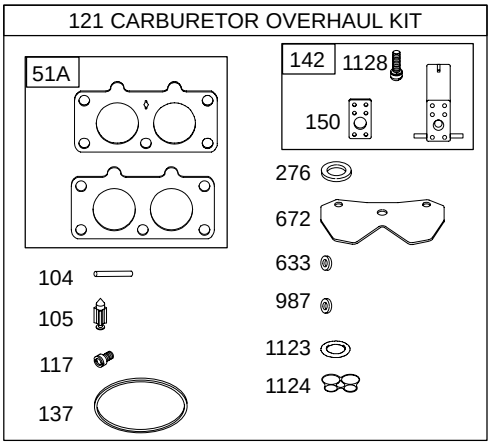

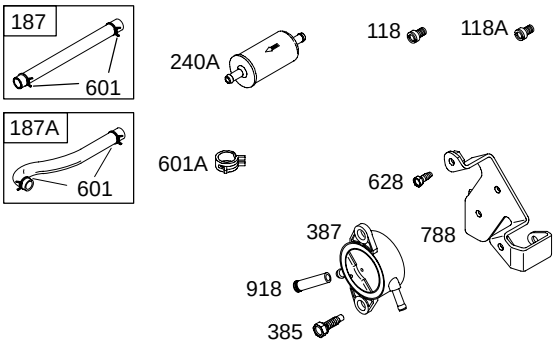

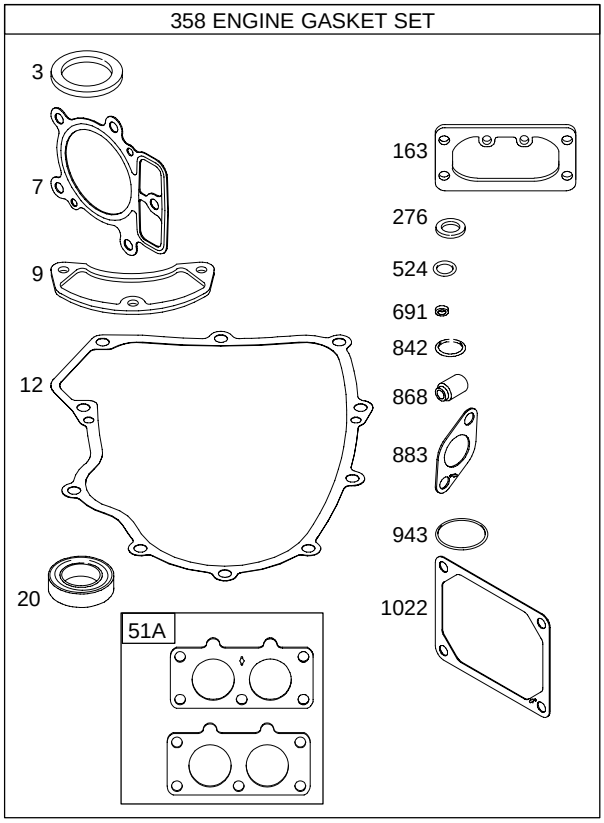

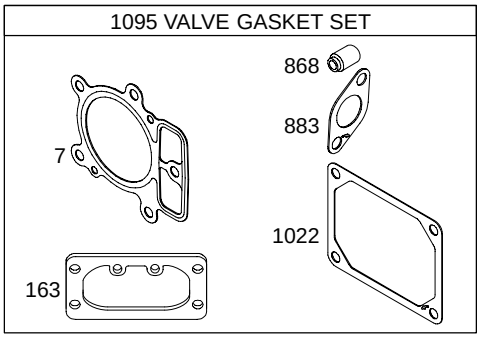

Illustrations cover a range of engines. Parts shown without corresponding text may not be used on your specific engine.

www.mymowerparts.com

40F700

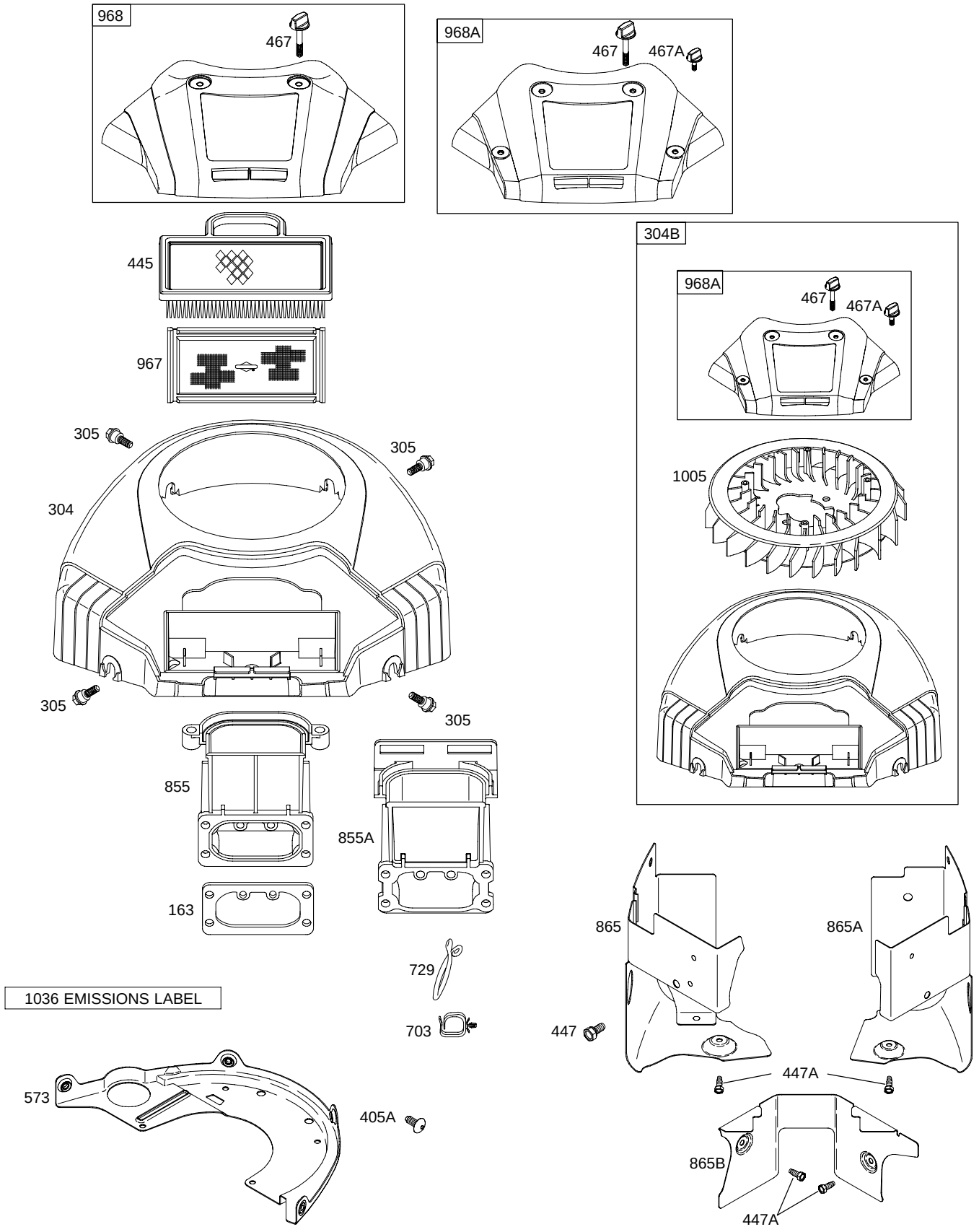

Illustrations cover a range of engines. Parts shown without corresponding text may not be used on your specific engine.

40F700

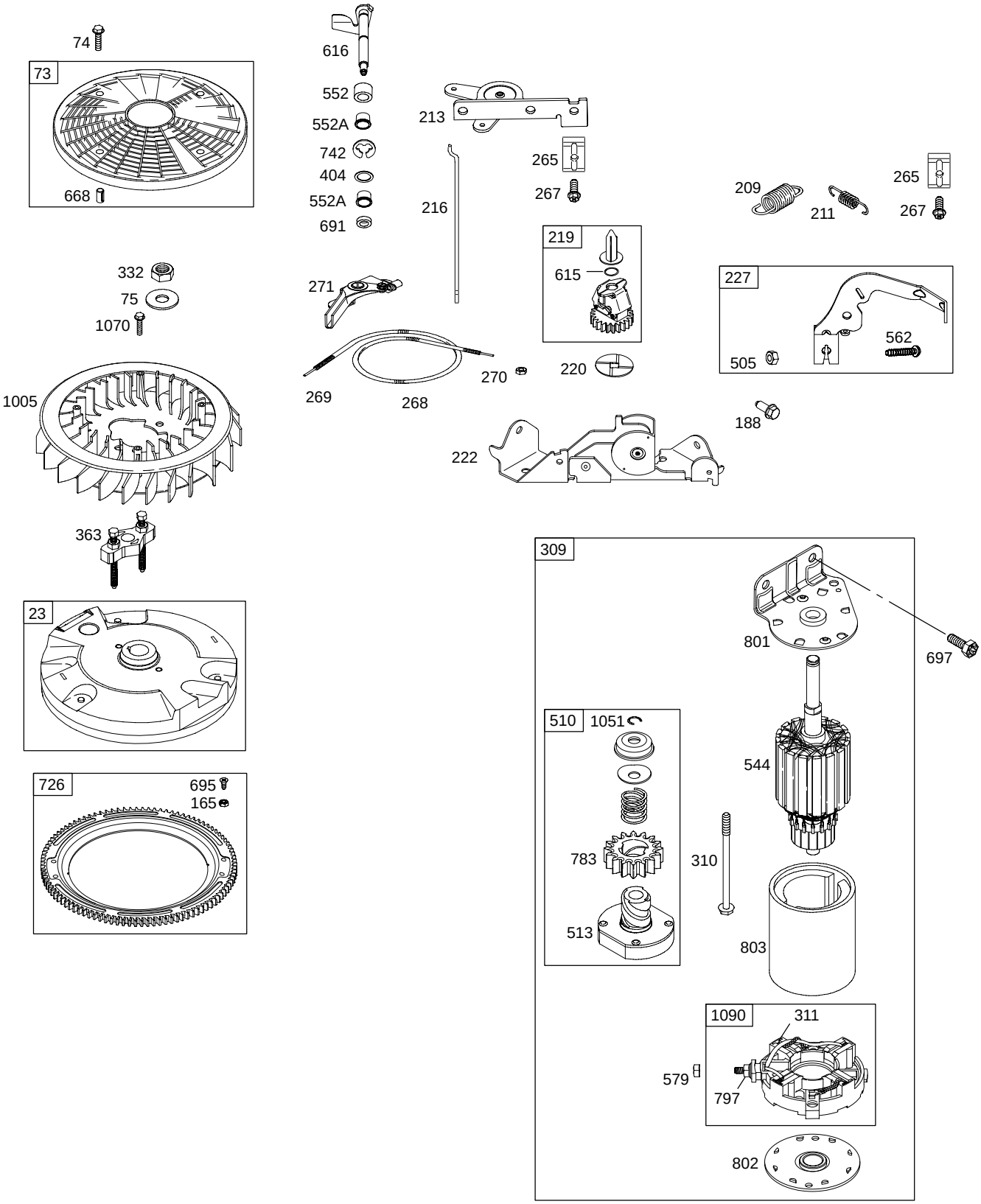

Illustrations cover a range of engines. Parts shown without corresponding text may not be used on your specific engine.

For Briggs & Stratton Discount Parts Call 606-678-9623 or 606-561-4983

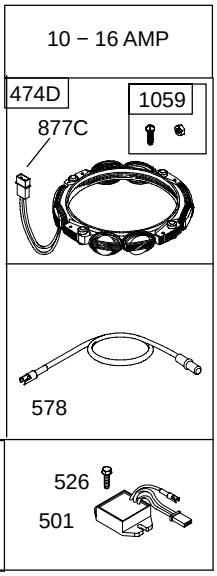

NOTE: *All stators use a No. 1119 mounting screw.*

NOTE: *The proper flywheel part number and/or the alternator magnet size will determine the alternator type or output. See repair instruction manual for additional information.*

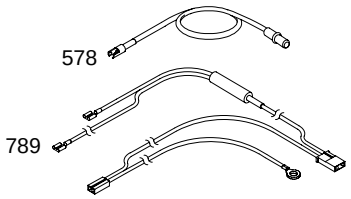

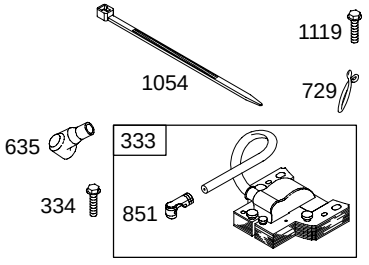

Illustrations cover a range of engines. Parts shown without corresponding text may not be used on your specific engine.

www.mymowerparts.com

For Briggs & Stratton Discount Parts Call 606-678-9623 or 606-561-4983

40F700

REF. NO.	PART NO.	DESCRIPTION
1	699751	Cylinder Assembly (Used After Code Date 03082800).
		------ **Note** ------
		699742 Cylinder Assembly (Used Before Code Date 03082900).
2	499585	Kit−Bushing/Seal (Magneto Side)
3	★391086	Seal−Oil (Magneto Side)
4	699747	Sump−Engine (Used After Code Date 03082800).
		------ **Note** ------
		690069 Sump−Engine (Used Before Code Date 03082900).
5	697580	Head−Cylinder (Cylinder 1)
5A	697581	Head−Cylinder (Cylinder 2)
7	★Δ690962	Gasket−Cylinder Head
8	499601	Breather Assembly
9	★690937	Gasket−Breather
10	691108	Screw (Breather Assembly)
11	690942	Tube−Breather
12	★697227	Gasket−Crankcase
13	791130	Screw (Cylinder Head)
15	691680	Plug−Oil Drain (1/2" Square Flush)
15A	690946	Plug−Oil Drain
16	699700	Crankshaft (Used After Code Date 04010800).
16A	699701	Crankshaft (Includes Connecting Rod) (Used Before Code Date 04010800).
20	★690947	Seal−Oil (PTO Side)
22	694966	Screw (Crankcase Cover/Sump)
23	691053	Flywheel
24	222698	Key−Flywheel
25	698429	Piston Assembly (Standard)
		------ **Note** ------
		698434 Piston Assembly (.020" Oversize)
26	698430	Ring Set (Standard)
		------ **Note** ------
		698437 Ring Set (.020" Oversize)
27	690975	Lock−Piston Pin
28	690229	Pin−Piston (Standard)
29	699699	Rod−Connecting (Standard) (Used After Code Date 04010800).
		------ **Note** ------
		(For Replacement Connecting Rod, See Reference 16A) (Used Before Code Date 04010900).
32	690976	Screw (Connecting Rod)
33	697576	Valve−Exhaust
34	697464	Valve−Intake
35	690963	Spring−Valve (Intake)
36	690963	Spring−Valve (Exhaust)
42	499586	Keeper−Valve
45	690977	Tappet−Valve
46	790562	Camshaft (Used After Code Date 03082800).
		------ **Note** ------
		690978 Camshaft (Used Before Code Date 03082900).
50A	695241	Manifold−Intake (Plastic)
51	690950	Gasket−Intake
51A	★●◆791677	Gasket−Intake
53	690951	Stud (Carburetor)
54	699816	Screw (Intake Manifold)
73	494439	Screen−Rotating
74	698425	Screw (Rotating Screen)
75	691056	Washer (Flywheel)
95	690718	Screw (Throttle Valve)
98	699721	Kit−Idle Speed (Used After Code Date 04091400).
		------ **Note** ------
		499802 Kit−Idle Speed (Used Before Code Date 04091500).
104	●694918	Pin−Float Hinge (Used After Code Date 04091400).
		------ **Note** ------
		690984 Pin−Float Hinge (Used Before Code Date 04091500).
105	●698537	Valve−Float Needle (Used After Code Date 04091400).
		------ **Note** ------
		690985 Valve−Float Needle (Used Before Code Date 04091500).

★ Included in Engine Gasket Set−Ref. No. 358.
● Included in Carburetor Overhaul Kit−Ref. No. 121.
◆ Included in Carburetor Gasket Set−Ref. No. 977.
Δ Included in Valve Gasket Set−Ref. No. 1095.

Illustrations cover a range of engines. Parts shown without corresponding text may not be used on your specific engine.

www.mymowerparts.com

For Briggs & Stratton Discount Parts Call 606-678-9623 or 606-561-4983

REF. NO.	PART NO.	DESCRIPTION
108	**690986**	Valve−Choke
117	●**690232**	Jet−Main (Standard) (Used Before Code Date 04091500). **−−−−−− Note −−−−−−** **699732** Jet−Main (Standard) (Left or Cylinder 1) (Used After Code Date 04091400).
117A	**699733**	Jet−Main (Standard) (Right Or Cylinder 2) (Used After Code Date 04091400).
118	**790890**	Jet−Main (High Altitude) (Left or Cylinder 1) (Used After Code Date 04091400).
118A	**699458**	Jet−Main (High Altitude) (Right Or Cylinder 2) (Used After Code Date 04091400).
121	**699734**	Kit−Carburetor Overhaul (Used After Code Date 04091400). **−−−−−− Note −−−−−−** **499811** Kit−Carburetor Overhaul (Used Before Code Date 04091500).
125	**699709**	Carburetor
130	**690993**	Valve−Throttle
131	**499805**	Kit−Throttle Shaft
133	**699724**	Float−Carburetor (Used After Code Date 04091400). **−−−−−− Note −−−−−−** **499806** Float−Carburetor (Used Before Code Date 04091500).
135	**699729**	Tube−Fuel Transfer (Used After Code Date 04091400). **−−−−−− Note −−−−−−** **499803** Tube−Fuel Transfer (Used Before Code Date 04091500).
137	●◆**690994**	Gasket−Float Bowl
141	**699722**	Kit−Choke Shaft (Used After Code Date 04091400). **−−−−−− Note −−−−−−** **499807** Kit−Choke Shaft (Used Before Code Date 04091500).
142	●**699726**	Nozzle−Carburetor (Standard) (Used After Code Date 04091400). **−−−−−− Note −−−−−−** **499808** Nozzle−Carburetor (Standard) (Used Before Code Date 04091500).
146	**690979**	Key−Timing
150	●◆**690995**	Gasket−Nozzle
160	**699727**	Retainer−Solenoid (Used After Code Date 04091400). **−−−−−− Note −−−−−−** **690996** Retainer−Solenoid (Used Before Code Date 04091500).
163	★Δ**691001**	Gasket−Air Cleaner
165	**693148**	Nut (Ring Gear)
187	**791666**	Line−Fuel (Cut To Required Length) (Used After Code Date 05063000). **−−−−−− Note −−−−−−** **691050** Line−Fuel (Cut To Required Length) (Used Before Code Date 05070100). **791745** Line−Fuel (Cut To Required Length) Used on Type No(s). 0112.
187A	**791744**	Line−Fuel (Molded) (Used After Code Date 05063000). **−−−−−− Note −−−−−−** **691049** Line−Fuel (Molded) (Used Before Code Date 05070100).
188	**691108**	Screw (Control Bracket)

★ Included in Engine Gasket Set−Ref. No. 358.
● Included in Carburetor Overhaul Kit−Ref. No. 121.
◆ Included in Carburetor Gasket Set−Ref. No. 977.
Δ Included in Valve Gasket Set−Ref. No. 1095.

Illustrations cover a range of engines. Parts shown without corresponding text may not be used on your specific engine.

www.mymowerparts.com

For Briggs & Stratton Discount Parts Call 606-678-9623 or 606-561-4983

40F700

REF. NO.	PART NO.	DESCRIPTION
192	**690083**	Adjuster−Rocker Arm
209	**698071**	Spring−Governor (White)
211	**691019**	Spring−Governed Idle
212	**695238**	Link−Throttle (Used With Plastic Intake Manifold)
213	**691021**	Bracket−Choke Control
216	**691022**	Link−Choke
219	**698231**	Gear−Governor
220	**690412**	Washer (Governor Gear)
222	**698761**	Bracket−Control
227	**691048**	Lever−Governor Control
231	**690718**	Screw (Choke Valve)
239	**491657**	Switch−Oil Pressure
240A	**695666**	Filter−Fuel
250	**690957**	Retainer−Breather
252	**690956**	Collector−Oil
265	**691024**	Clamp−Casing
267	**691044**	Screw (Casing Clamp) (Hex Head)
268	**691025**	Casing−Control Wire (Cut To Required Length)
269	**691026**	Wire−Control (Cut To Required Length)
270	**691027**	Nut (Control Wire Casing)
271	**691028**	Lever−Control
276	★●◆ **690997**	Washer−Sealing
287	**691108**	Screw (Dipstick Tube)
304	**790688**	Housing−Blower (Black) (Used After Code Date 04080300).
304B	**790692**	Housing−Blower (Used Before Code Date 04080400).
305	**691005**	Screw (Blower Housing)
309	**497401**	Motor−Starter
310	**691263**	Screw (Starter Motor)
311	**497608**	Brush Set
332	**691059**	Nut (Flywheel)
333	**691060**	Armature−Magneto
334	**691061**	Screw (Magneto Armature)
337	**491055**	Plug−Spark
358	**694012**	Gasket Set−Engine
363	**19203**	Puller−Flywheel
383	**19374**	Wrench−Spark Plug
385	**691108**	Screw (Fuel Pump)
387	**808656**	Pump−Fuel
404	**690442**	Washer (Governor Crank)
405A	**697820**	Screw (Back Plate)(Mounting)
415	**690283**	Plug
418	**690999**	Plate−Carburetor
445	**698754**	Filter−Air Cleaner Cartridge
447	**691003**	Screw (Air Guide Cover)
447A	**691108**	Screw (Air Guide Cover)
467	**691008**	Knob−Air Cleaner
467A	**790697**	Knob−Air Cleaner (1 1/2” Long)
474D	**696458**	Alternator (10−16 Amp Regulated)
501	**691185**	Regulator (10−16 Amp Regulated)
505	**691029**	Nut (Governor Control Lever)
510	**696541**	Drive−Starter
513	**692024**	Clutch−Drive
523	**691036**	Dipstick
524	★ **691032**	Seal−Dipstick Tube
525	**691037**	Tube−Dipstick
526	**691108**	Screw (Regulator) (16 Amp)(5/8” Long)
544		Armature−Starter (Service With **497401** Starter Motor Only)
552	**690552**	Bushing−Governor Crank
552A	**690553**	Bushing−Governor Crank
562	**690311**	Bolt (Governor Control Lever)
573	**790444**	Plate−Back
578	**691208**	Wire Assembly
579	**691029**	Nut (Starter Cable)
601	**95162**	Clamp−Hose (Zinc Plate) (Spring Wire)
601A	**691038**	Clamp−Hose (Black)(Spring Steel)
615	**698290**	Retainer−Governor Shaft
616	**691045**	Crank−Governor
617	**697891**	Seal−O Ring
628	**691108**	Screw (Fuel Pump Bracket)
633	●◆ **690998**	Seal−Choke/Throttle Shaft
635	**66538**	Boot−Spark Plug
654	**690958**	Nut (Carburetor)
668	**691215**	Spacer
672	●◆ **690234**	Gasket−Carburetor Plate
691	★ **690657**	Seal−Governor Shaft
695	**693149**	Screw (Ring Gear)
697	**690372**	Screw (Drive Cap)
703	**691010**	Clip
718	**690959**	Pin−Locating
726	**499612**	Gear−Ring

★ Included in Engine Gasket Set−Ref. No. 358.
● Included in Carburetor Overhaul Kit−Ref. No. 121.
◆ Included in Carburetor Gasket Set−Ref. No. 977.
Δ Included in Valve Gasket Set−Ref. No. 1095.

Illustrations cover a range of engines. Parts shown without corresponding text may not be used on your specific engine.

www.mymowerparts.com

For Briggs & Stratton Discount Parts Call 606-678-9623 or 606-561-4983

REF. NO.	PART NO.	DESCRIPTION
729	**694123**	Clip−Wire
741	**690980**	Gear−Timing
742	**690328**	Retainer−E Ring
750	**696999**	Screw (Oil Pump Cover)
783	**695708**	Gear−Pinion
788	**691039**	Bracket−Fuel Pump
789	**691220**	Harness−Wiring
797	**693167**	Nut (Brush Retainer)
798	**697890**	Screw (Rocker Arm)
801	**691283**	Cap−Drive
802	**691286**	Cap−End
803		Housing−Starter (Service With **497401** Starter Motor Only)
842	★**691031**	Seal−O Ring (Dipstick Tube)
847	**499602**	Dipstick/Tube Assembly
851	**493880**	Terminal−Spark Plug
855	**691011**	Adapter−Air Cleaner
855A	**698072**	Adapter−Air Cleaner
865	**691012**	Cover−Air Guide (Cylinder 1)
865A	**691014**	Cover−Air Guide (Cylinder 2)
865B	**691015**	Cover−Air Guide (Valley)
868	★Δ**690968**	Seal−Valve
877C	**399916**	Wire/Connector−Alternator (10−16 Amp Regulated)
883	★Δ**690970**	Gasket−Exhaust
914	**691127**	Screw (Rocker Cover)
918	**694000**	Hose−Vacuum
929	**695239**	Screw (Choke Control Bracket) (Used With Plastic Intake Manifold)
943	★**690589**	Seal−O Ring (Oil Pump Cover)
947	**699728**	Solenoid−Fuel (Used After Code Date 04091400).
		−−−−−− Note −−−−−−
		499809 Solenoid−Fuel (Used Before Code Date 04091500).
965	**499613**	Cover−Oil Pump
967	**273638**	Filter−Pre Cleaner
968	**790095**	Cover−Air Cleaner (Used Before Code Date 04080400).
968A	**790689**	Cover−Air Cleaner (Used After Code Date 04080300).
975	**499810**	Bowl−Float
977	**699735**	Gasket Set−Carburetor (Used After Code Date 04091400).
		−−−−−− Note −−−−−−
		499812 Gasket Set−Carburetor (Used Before Code Date 04091500).
987	●◆**691000**	Seal−Throttle Shaft
1005	**790698**	Fan−Flywheel (Used After Code Date 04080300).
		−−−−−− Note −−−−−−
		499603 Fan−Flywheel (Used Before Code Date 04080400).
1013	**690954**	Nipple−Oil Filter
1017	**690770**	Screen−Oil Pump
1019	**790094**	Kit−Label
1022	★Δ**690971**	Gasket−Rocker Cover
1023	**499599**	Cover−Rocker (Cylinder 1)
1023A	**499600**	Cover−Rocker (Cylinder 2)
1024	**499054**	Pump−Oil
1026	**690981**	Rod−Push (Steel)
1026A	**690982**	Rod−Push (Aluminum)
1027A	**696854**	Filter−Oil
1029	**690972**	Arm−Rocker
1035	**691042**	Shaft−Pump
1036	**790626**	Label−Emissions (Used After Code Date 04063000).
		−−−−−− Note −−−−−−
		695704 Label−Emissions (Used Before Code Date 04070100).
1051	**691265**	Ring−Retaining
1054	**280275**	Tie−Cable
1058	**276245**	Operator's Manual (Emission)
1059	**698516**	Kit−Screw/Washer
1070	**690372**	Screw (Flywheel Fan)
1090	**691293**	Retainer−Brush
1095	**694013**	Gasket Set−Valve
1100	**690973**	Pivot−Rocker Arm
1119	**691183**	Screw (Alternator)
1123	●◆**699725**	Seal−O Ring (Solenoid Retainer) (Used After Code Date 04091400).
		−−−−−− Note −−−−−−
		690987 Seal−O Ring (Solenoid Retainer) (Used Before Code Date 04091500).
1124	●◆**690988**	Seal−O Ring (Fuel Transfer Tube)
1126	**690991**	Screw (Fuel Transfer Tube)
1127	**690992**	Screw (Float Bowl)
1128	●**690990**	Screw (Carburetor Nozzle)
1169A	**693140**	Screw (Carburetor Cover Plate)
1330	**273521**	Repair Manual
1342	**699731**	Extension−Fuel Transfer Tube
1353	**699725**	Seal−O Ring (Fuel Transfer Tube Extension)

★ Included in Engine Gasket Set−Ref. No. 358.
● Included in Carburetor Overhaul Kit−Ref. No. 121.
◆ Included in Carburetor Gasket Set−Ref. No. 977.
Δ Included in Valve Gasket Set−Ref. No. 1095.

Illustrations cover a range of engines. Parts shown without corresponding text may not be used on your specific engine.

www.mymowerparts.com