For Briggs & Stratton Discount Parts Call 606-678-9623 or 606-561-4983

FORM MS-8178-9/87
REPLACES FORM MS-8180-12/85 and FORM MS-8178-3/87
FILE IN SECT. 2 OF SERVICE MANUAL

114900 to 114999

Illustrated Parts List

Model Series

114900 to 114999

NON-COMPLIANCE

TYPE NUMBERS
0015 through 0054
0101 through 0156
0168 through 0183

COMPLIANCE

TYPE NUMBERS
3015, 3016,
3050, 3051,
3111 through 3156

TO FIND

THE CORRECT NUMBER OF THE PART YOU NEED:

FOLLOW THE INSTRUCTIONS BELOW

A. Refer to Engine Model, Type and Code Number that is stamped on the blower housing of engine. Engine type numbers such as 012301 are listed herein only as 0123. The two digits (01 or 02, etc.) to the right of the space are not needed for parts identification. Then use the Illustrated Parts List covering the Model Series.

B. Refer to Illustrated Parts section and compare the old part with illustration. The number on the illustration is the Reference Number. Assemblies include all parts shown in frames. All parts shown in assembly frames on which individual reference numbers are given can be purchased separately.

C. After the Reference Number has been identified, refer to the Numerical Parts List, where Reference and Master Part Number are listed. THE MASTER PART IS USED ON ALL TYPE NUMBERS EXCEPT THOSE TYPE NUMBERS UNDER "NOTE".

D. If a "Note" appears below the Master Part Number, this means that this part differs from the Master Part for certain types. If the Type number is listed under "Note", order the part referred to.

E. If the Engine Type Number does not appear after any part number listed under "Note", use the Master Part Number.

F. For Type Numbers higher than those covered by this book, please refer to the factory if you are unable to identify the part by comparison.

PRINTED IN U.S.A.

ORIGINAL BRIGGS & STRATTON SERVICE PARTS ®

COPYRIGHT©

www.mymowerparts.com

For Briggs & Stratton Discount Parts Call 606-678-9623 or 606-561-4983

114900 to 114999

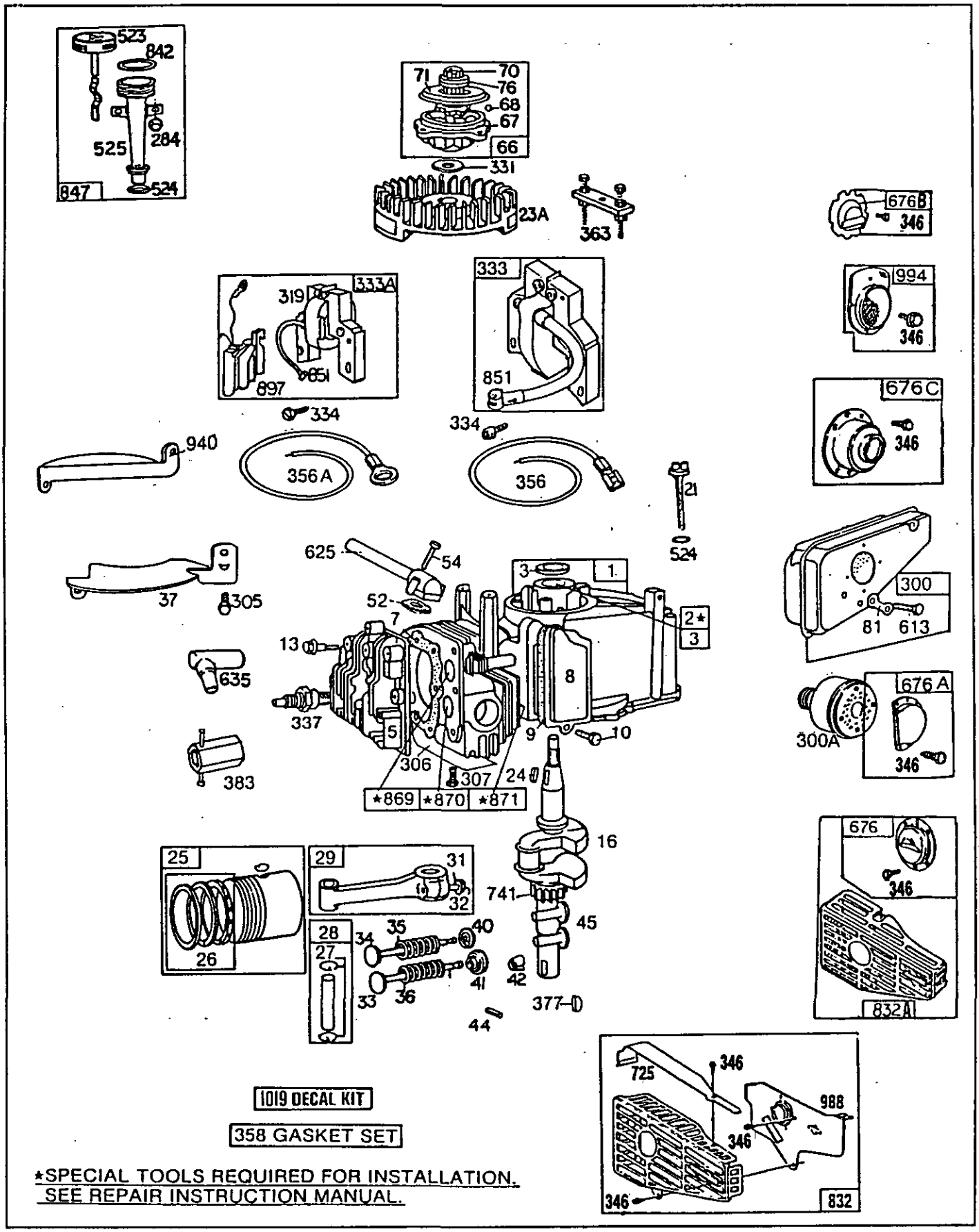

www.mymowerparts.com

For Briggs & Stratton Discount Parts Call 606-678-9623 or 606-561-4983

Sump assemblies illustrated on this page DO NOT include an oil filler opening.

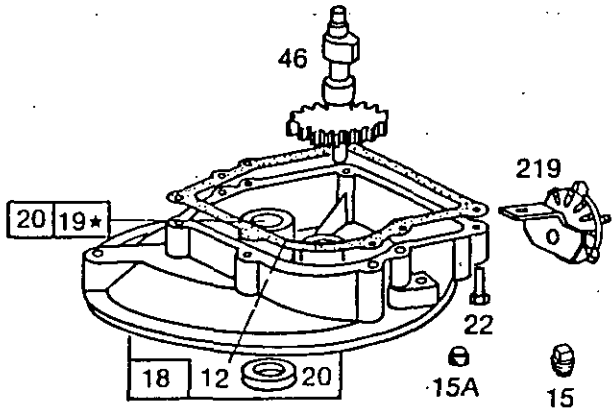

★SPECIAL TOOLS REQUIRED TO INSTALL. SEE REPAIR INSTRUCTION MANUAL.

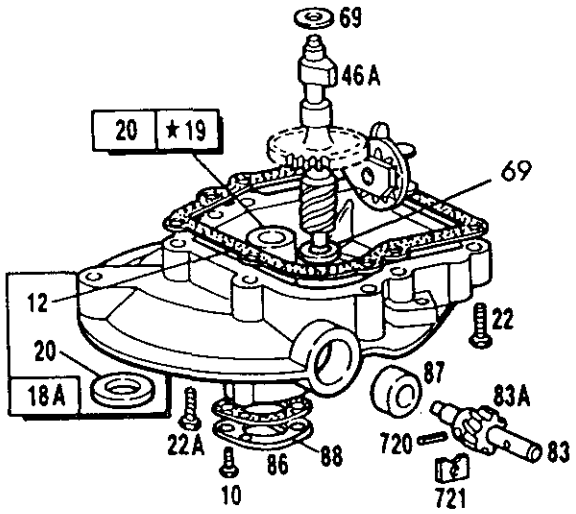

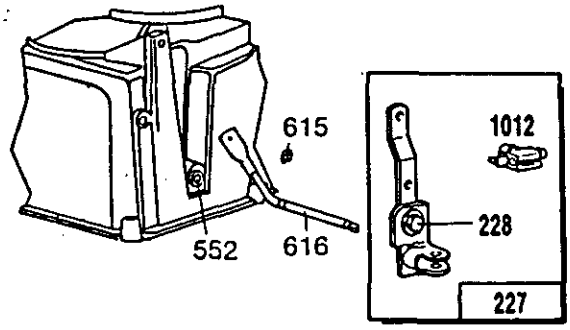

www.mymowerparts.com

For Briggs & Stratton Discount Parts Call 606-678-9623 or 606-561-4983

114900 to 114999

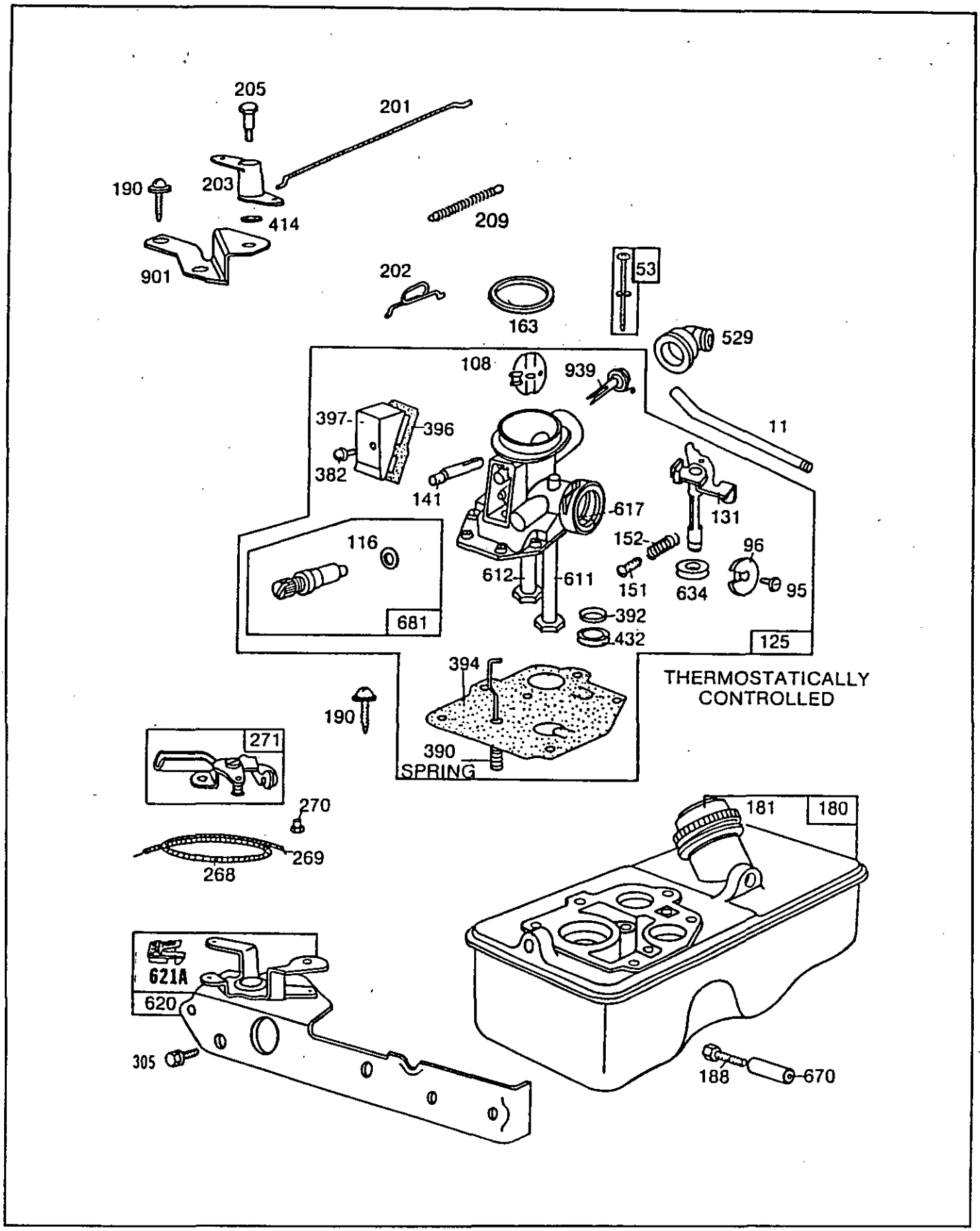

www.mymowerparts.com

For Briggs & Stratton Discount Parts Call 606-678-9623 or 606-561-4983

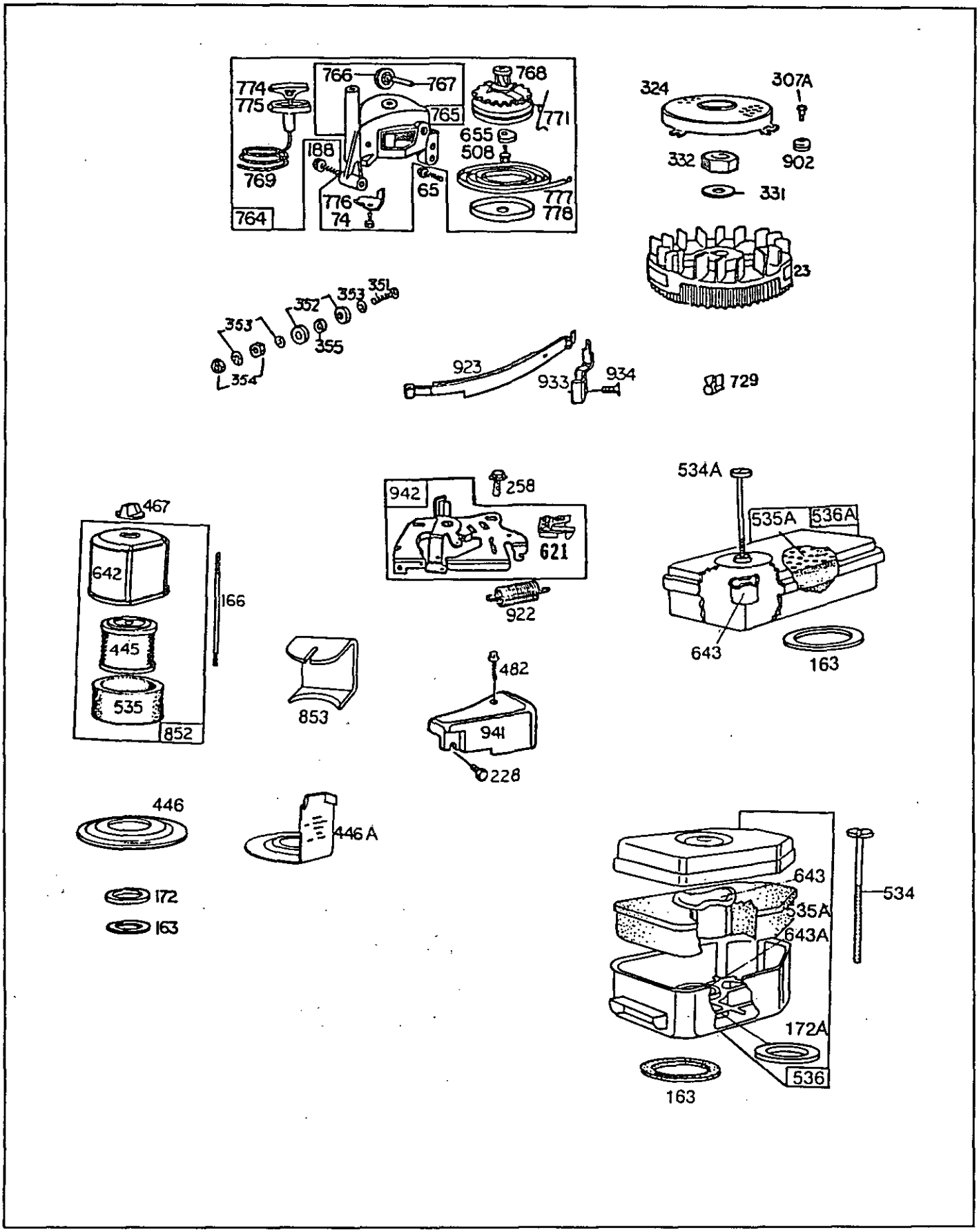

www.mymowerparts.com

For Briggs & Stratton Discount Parts Call 606-678-9623 or 606-561-4983

114900 to 114999

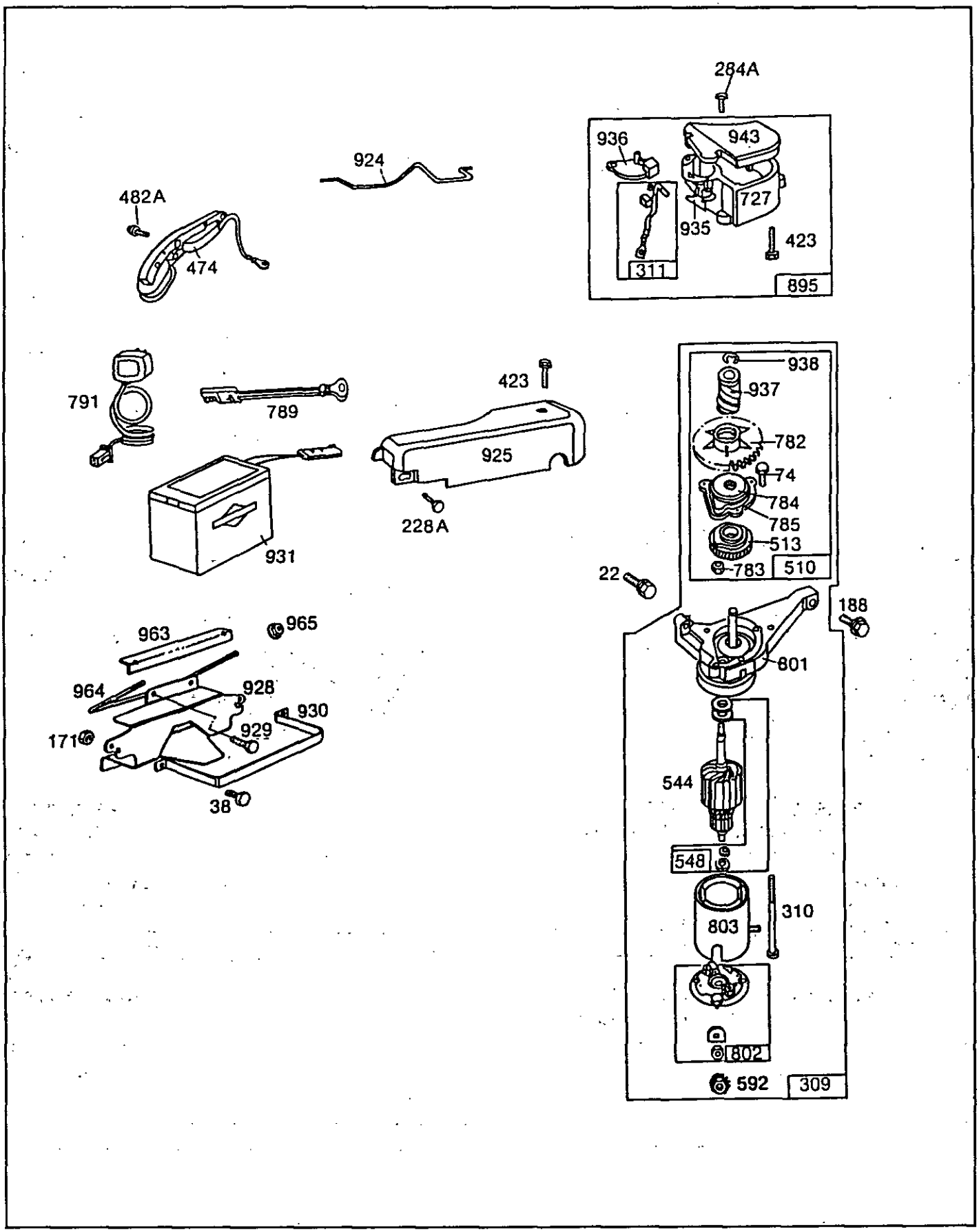

www.mymowerparts.com

For Briggs & Stratton Discount Parts Call 606-678-9623 or 606-561-4983

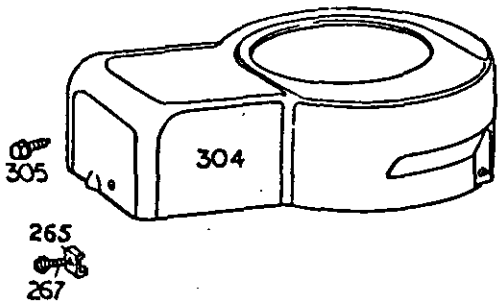

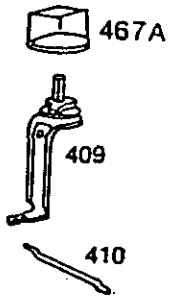

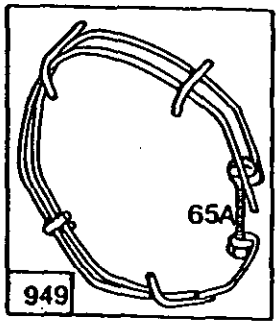

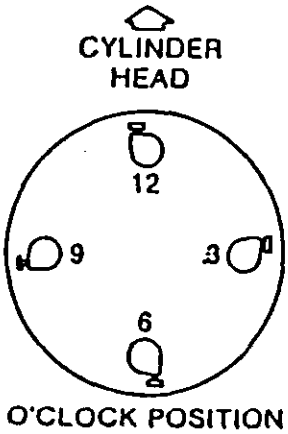

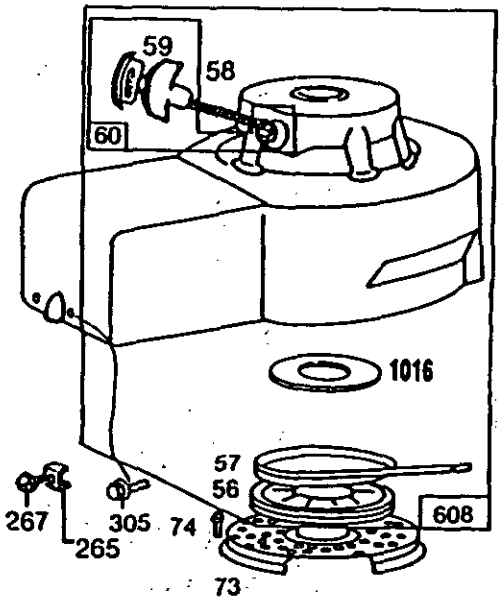

REWIND STARTER ASSEMBLIES FOR NON-BAND BRAKE ENGINES

CLOCK POSITIONS				
1:30	3	6	9	12
396090	396468	396794	398780	396411

REWIND STARTER ASSEMBLIES FOR BAND BRAKE ENGINES

CLOCK POSITIONS				
1:30	3	6	9	12
		396413*	397824	396017

*See Text for Specials — Ref. 608

www.mymowerparts.com

For Briggs & Stratton Discount Parts Call 606-678-9623 or 606-561-4983

114900 to 114999

REF. NO.	PART NO.	DESCRIPTION
1	**399166**	Cylinder Assembly (Used after Code Date 85051000)
	Note:	**396405** Cylinder Assy. (Used before Code Date 85051100)
2	**231271**	Bushing—Cylinder
	Note:	Requires special tools for installation.
3	**299819**	Seal—Oil
5	**211851**	Head—Cylinder
7	***270836**	Gasket—Cylinder Hd.
8	**298383**	Breather—Valve Chamber
9	***270239**	Gasket—Valve Cover
10	**93394**	Screw—Breather and P.T.O. Gear Sump Cover (Ref. No. 86) *Mounting Sem*
11	**231292**	Tube—Breather
12	***270833**	Gasket—Oil Sump—.015" thick (Standard)
	***270895**	Gasket—Oil Sump—.005" thick
	***270896**	Gasket—Oil Sump—.009" thick
13	**93111**	Screw—Cylinder Hd. (1-15/16" long)
	Note:	**93772** Stud—Cyl. Hd. **22963** Washer Used on Type No. 3140.
15	**91084**	Plug—Oil Drain
15A	**93418**	Plug—Oil Drain (Socket Head) To Replace Crankshaft Gear Pin, Order Part No. **230978**.
16	**397230**	Crankshaft
	Note:	***394881*** *Crankshaft* Used on Type Nos. 0018, 0172, 0175. **396045** Crankshaft Used on Type Nos. 0178, 3113, 3147. **396046** Crankshaft Used on Type Nos. 0029, 0054, 0131, 0132, 0139, 0147, 0171, 3114, 3134, 3153. **396048** Crankshaft Used on Type No. 0155. **396228** Crankshaft Used on Type Nos. 0168, 0169. **397050** Crankshaft Used on Type Nos. *0027, 0135, 0136,* 0142, 3016, 3112, 3130, 3133, 3140. **397231** Crankshaft Used on Type Nos. 0016, 0052, 0140, 0150, 0156. **398931** Crankshaft Used on Type Nos. 3050, 3051.
18	**395384**	Sump—Engine
18A	***395390***	*Sump—Engine* Used on *Model 114982 to 114988* Series.
19	**293709**	Bushing—Engine Sump
	Note:	Requires special tools for installation.
20	**391483**	Seal—Oil
21	**280485**	Gage—Oil Filler Plug (Used after Code Date 85051000)
	Note:	**280381** Gage—Oil Filler Plug (Used before Code Date 85051100)
22	**93032**	Screw—Mtg. Sem
22A	**93415**	Screw—Sem (One used in Auxiliary Drive Gear Sump) on *Model 114982 to 114988* Series.
	Note:	Use **93032** Screw in the other (5) Sump Mounting Holes
23	**394848**	Flywheel—Magneto
	Note:	**393831** Flywheel—Magneto Used on Type Nos. 0025, 0027, 0029, 0054, 0132, 0133, 0136, 0139, 0147, 0148, 0171, 0178, 0180, 3149. **394032** Flywheel—Magneto Used on Type Nos. 0015, 0016, 0018, 0117, 0137, 0138, 0140, 0141, 0143, 0144, 0145, 0146, 0149, 0150, 0151, 0152, 0156, 0168, 0169, 0172, 0175, 0176, 0177, 0179, 0181, 0183. **394066** Flywheel—Magneto Used on Type Nos. 0051, 0052, 0155.
23A	**395653**	Flywheel—Magneto
24	**222698**	Key—Flywheel
25	**396455**	Piston Assy.—Standard
	396456	Piston Assy.—.010" O.S.
	396457	Piston Assy.—.020" O.S.
	396458	Piston Assy.—.030" O.S.
MODEL 114900 SERIES PISTON RING SETS:		
	Note:	For Chrome Piston Ring Set—standard size—order Part No. **392330**.
26	**396459**	Ring Set—Std. Piston
	396460	Ring Set—.010" O.S. Piston
	396461	Ring Set—.020" O.S. Piston
	396462	Ring Set—.030" O.S. Piston
27	**26026**	Lock—Piston Pin
28	**391649**	Pin Assembly—Piston—Standard
	394861	Pin Assembly—Piston—.005" O.S.
29	**391640**	Rod Assembly—Connecting
	Note:	For Connecting Rod *with .020" undersize* Crankpin Bearing—Order No. **393710**.
31	**222282**	Washer—Flat (One for Each Screw)
32	**93670**	Screw—Connecting Rod
33	**261912**	Valve—Exhaust
	Note:	**212004** Valve—Exhaust Used on Type Nos. 3145, 3146, 3148.
34	**261233**	Valve—Intake
35	**260552**	Spring—Intake Valve
36	**26826**	Spring—Exhaust Valve
	Note:	**26478** Spring—Exhaust Valve Used on Type Nos. 3145, 3146, 3148.
37	**223150**	Guard—Flywheel
38	**93777**	Screw—Sem
40	**93312**	Retainer—Intake Valve Spring Used with valves with groove in stem.

*Included in Gasket Set—Part No. 391662.

†Included in Starter Drive Kit—Part No. 395727.

www.mymowerparts.com

For Briggs & Stratton Discount Parts Call 606-678-9623 or 606-561-4983

REF. NO.	PART NO.	DESCRIPTION
41	292259	Rotocap—Exhaust Valve
42	230127	Retainer—Exhaust Valve Rotocap
	Note:	**93312** Retainer—Exhaust Valve Spring Used on Type Nos. 3145, 3146, 3148.
44	230126	Pin—Exhaust Valve Rotocap Retainer
45	261250	Tappet—Valve
46	395856	Gear—Cam
46A	396052	Cam Gear, Worm and Oil Slinger Assembly (Clockwise Rotation)
	Note:	**396064** Cam Gear, Worm and Oil Slinger Assy. (Counterclockwise) Used on Type Nos. 0051, 0133, 0138, 0148, 0154, 0169, 0176, 0181, 3051, 3123, 3126, 3138, 3151, 3155.
52	*270844	Gasket—Intake Elbow
53	391982	Screw—Tank to Carburetor
54	93485	Screw—Intake Elbow Mounting
56	280117	Pulley—Starter
57	490179	Spring—Rewind Starter
58	280406	Rope—Rewind Starter—81" long
	Note:	If longer rope is needed, Order No. **395883** and cut to required length. Order **66734** for 48-5/8" long rope.
59	396892	Insert—Starter Grip
60	393152	Grip—Starter Rope
65	93587	Screw—Vertical Pull Starter Mounting
65A	94124	Screw—Guard Retaining
66	399671	Clutch Assembly—Rewind Starter (Uses Rubber Coated Retainer Washer—Ref. 71)
	Note:	**394558** Clutch Assy.—Rewind Starter (Uses Non-Coated Retainer Washer—Ref. 71)
67	394897	Housing—Starter Clutch
68	63770	Ball—Clutch
69	66874	Washer—Thrust
	Note:	**68938** Washer—Thrust Used on Auxiliary Drive P.T.O. Camshaft and is located next to the Worm Gear.
70	298436	Ratchet—Rewind Starter
71	394506	Washer—Clutch Retainer (Rubber Coated)
	Note:	**221653** Washer—Clutch Retainer (Non-Coated)
73	221661	Screen—Starter Pulley
74	93490	Screw—Sem
76	68238	Washer—Ratchet Sealing
81	223256	Lock—Muffler Screw
83	230831	Shaft—Drive
	Note:	**230870** Shaft—Drive Used on Type Nos. 3145, 3146. **230921** Shaft—Drive Used on Type No. 0176. **230948** Shaft—Drive Used on Type Nos. 0133, 0148, 0154, 3051, 3138, 3155.
83A	231278	Gear—Drive
	Note:	**231279** Gear—Drive Used on Type Nos. 0051, 0133, 0138, 0148, 0154, 0169, 0176, 0181, 3051, 3123, 3126, 3138, 3151, 3155.
86	221780	Cover—Sump
87	391484	Seal—Oil
88	270328	Gasket—Sump Cover
95	93499	Screw—Throttle Valve Mounting Sem
96	211237	Valve—Throttle
108	280429	Valve—Choke
	Note:	**280370** Valve—Choke Used on Type Nos. 3142, 3143.
116	280203	O-Ring
125	397180	Carburetor Assembly Used after Code Date 83111404.
	Note:	**396336** Carburetor Assy. Used on Type Nos. 3142, 3143. **396586** Carburetor Assy. Used before Code Date 83111504.
131	394035	Shaft and Lever—Throttle
141	68908	Shaft—Choke
151	93524	Screw—Rd. Hd.—5-40 x 1/2
152	260746	Spring—Throttle Adj.
163	271139	Gasket—Air Cleaner Mounting
166	231332	Stud—Air Cleaner (Used after Code Date 83111404.)
	Note:	**231311** Stud—Air Cleaner (Used before Code Date 83111504.)
171	93203	Nut—Hex
172	271077	Gasket—Air Cleaner
172A	271273	Gasket—Air Cleaner
180	396781	Tank Assembly—Fuel
181	391494	Cap—Fuel Tank (Chrome)
188	94102	Screw—Fuel Tank and Starter Mounting
190	93440	Screw—Fuel Tank Mtg.
201	261918	Link—Governor
202	261897	Link—Throttle
203	280272	Bell Crank
205	231520	Screw—Shoulder (Used after Code Date 86112300.)
	Note:	**93838** Screw—Shoulder (Used before Code Date 86112400.)
209	261936	Spring—Governor
	Note:	**261926** Spring—Governor Used on Type Nos. 0134, 0168, 0169, 0170, 3135. **261927** Spring—Governor Used on Type Nos. 0054, 0132, 0135, 0139, 0141, 0142, 0143, 0147, 0149, 0151, 0152, 0154, 0155, 0171, 0176, 0178, 0179, 0182, 3132, 3151, 3156. **261935** Spring—Governor Used on Type Nos. 0051, 0052, 0177, 3140, 3145, 3146, 3147, 3148, 3153.

*Included in Gasket Set—Part No. 391662.

†Included in Starter Drive Kit— Part No. 395727.

www.mymowerparts.com

For Briggs & Stratton Discount Parts Call 606-678-9623 or 606-561-4983

114900 to 114999

REF. NO.	PART NO.	DESCRIPTION
		261938 Spring—Governor Used on Type Nos. 0133, 0136, 0148, 0150, 3130, 3133, 3136, 3139, 3141, 3142, 3143, 3144, 3150.
219	394044	Oil Slinger Assembly
227	396504	Lever Assembly Governor
228	93758	Screw—Hex Head
228A	93490	Screw—Hex Head
258	94018	Screw—Hex Head
265	22372	Clamp—Casing
267	93469	Screw—Clamp Mtg.
268	66986	Casing—Control Wire—48" long
	Note:	If longer casing is needed, specify length in inches; if a shorter casing is needed, order No. **66986** and cut to required length.
269	26099	Wire Control, 54" long
	Note:	If longer wire is needed, specify length in inches; if shorter wire is needed, order No. **26099** and cut to required length.
270	63426	Locknut—Control Wire Casing
271	290568	Lever Assembly—Control
284	94073	Screw—Clamp Mounting
284A	93892	Screw—Hex. Hd.
300	394644	Muffler—Exhaust
300A	394569	Muffler—Exhaust
		The Following *Blower Housing* is Used on Band Brake Engines
304	223204	Housing—Blower
		The Following Blower Housings Are Used on Non-Band Brake Engines
	396412	Housing—Blower
	Note:	**223287** Housing—Blower Used on Type Nos. 0015, 0016, 0017, 0018, 0051, 0052, 0117, 0137, 0138, 0140, 0141, 0143, 0144, 0145, 0146, 0149, 0150, 0151, 0152, 0155, 0168, 0169, 0172, 0175, 0176, 0177, 0179, 0181, 0183.
305	94153	Screw—Sem
306	223263	Shield—Cylinder
307	93490	Screw—Sem
307A	93926	Screw—Hex Head
309	395852	Motor—Starter (6 Volt)
310	94051	Bolt—Starter Motor
311	395728	Brush Kit—Starter Motor
319	395488	Armature Assembly (Less Trigger Coil)
324	223006	Screen—Rotating
331	223047	Washer—Flywheel
332	92284	Nut—Flywheel
333	397316	Armature—Magneto
333A	395489	Armature—Magneto
334	93381	Screw—Armature Mounting Sem
337	298809	Plug—Spark (with Gasket) 1-1/2" high—(37-42 mm.)
	Note:	**293918** Plug—Spark (with Gasket) 1-1/2" high (Resistor Type)
346	93705	Screw—Hex Hd.
351	93735	Screw—Terminal
352	66068	Washer—Insulating
353	92791	Washer—Lock—Shakeproof (3)
354	90576	Nut—Hex.—8-32 (2)
355	66554	Collar—Insulating
356	398808	Wire—Ground Used with Armature—Ref. 333 Only.
356A	298693	Wire—Ground (30" long, cut to suit) All Wires Listed Are Used with Armature—Ref. 333A Only.
	Note:	**396585** Wire—Ground (Dual Wire, cut to suit) Used on Type Nos. 0015, 0016, 0018, 0025, 0027, 0029.
358	391662	Gasket Set
363	19069	Puller—Flywheel (Optional Accessory)
377	93065	Key—Woodruff No. 6
382	93545	Screw—Choke Link Cover
383	89838	Wrench—Spark Plug
390	261249	Spring—Diaphragm
392	260455	Spring—Fuel Pump Diaphragm
394	391643	Diaphragm—Carburetor
396	270571	Gasket—Choke Link Cover
397	211678	Cover—Choke Link
409	391590	Control—Dial
410	260993	Link—Control
414	223932	Washer (Used after Code Date 86112300.)
	Note:	**220982** Washer (Used before Code Date 86112400.)
423	94026	Screw—Sem
432	221377	Cap—Spring
445	396424	Cartridge—Air Cleaner
446	222844	Base—Air Cleaner
446A	395642	Base—Air Cleaner
467	212706	Knob—Air Cleaner
467A	299858	Knob—Dial Control
474	397880	Stator Assy.—Alternator
482	93621	Screw—Sem
482A	94016	Screw—Hex. Hd.
508	93158	Screw—Sem
510	395727	Drive Kit—Starter
513	†394815	Clutch Assembly—Electric Starter
523	396372	Cap with Dipstick—Oil Filler
524	271485	Seal—Filler Tube
525	280578	Tube—Oil Filler (Used after Code Date 85051000)
	Note:	**280382** Tube—Oil Filler (Used before Code Date 85051100)
529	280368	Grommet—Breather
534	93865	Screw—Air Cleaner
534A	93374	Screw—Air Cleaner

*Included in Gasket Set—Part No. 391662.

†Included in Starter Drive Kit—Part No. 395727.

www.mymowerparts.com

For Briggs & Stratton Discount Parts Call 606-678-9623 or 606-561-4983

REF. NO.	PART NO.	DESCRIPTION
535	271466	Element—Air Cleaner
535A	270848	Element—Air Cleaner
536	394738	Cleaner—Assembly—Air
536A	391641	Cleaner Assembly—Air
544	396058	Armature—Starter
548	396067	Washer Set—Starter
552	230732	Bushing—Governor Shaft
592	93991	Nut—Hex.—10-24
608		Starter Assy.—Rewind See Chart on Page 7
	Note:	**398806** Starter Assy.—Rewind (6 o'clock) Used on Type No. 3145.
611	297219	Pipe—Fuel (long)
612	296811	Pipe—Fuel (short)
613	93935	Screw—Muffler Mtg.
615	93307	Retainer—E-Ring
616	394075	Crank—Governor
617	270344	Seal—Fuel Intake Tube
620	394642	Plate—Carburetor Control
	Note:	**394882** Plate—Carburetor Control Used on Type Nos. 0015, 0016, 0018, 0025, 0027, 0029, 0051, 0052, 0132, 0135, 0138, 0143, 0145, 0146, 0147, 0150, 0152, 0153, 0155, 0171, 0178, 0180, 0181, 0183, 3147.
621	396847	Switch—Stop (Used after Code Date 84030100)
	Note:	**297472** Switch—Stop (Used before Code Date 84030200)
621A	396847	Switch Assembly—Stop (Used after Code Date 85032700)
	Note:	**297472** Switch—Stop (Used before Code Date 85032800)
625	391377	Tube—Fuel Intake
634	270167	Washer—Throttle Shaft (Felt)
635	66538	Elbow—Spark Plug
642	223306	Cover—Air Cleaner

*Included in Gasket Set—Part No. 391662.

REF. NO.	PART NO.	DESCRIPTION
643	280374	Cup—Air Cleaner
643A	280342	Support—Air Cleaner Element
655	222057	Anchor—Spring
670	94038	Spacer—Fuel Tank Used on Engines with Band Brake
	Note:	**94047** Spacer—Fuel Tank Used on Engines without Band Brake
676	396548	Deflector—Muffler
676A	393760	Deflector—Muffler
676B	393756	Deflector—Muffler
676C	397931	Deflector—Muffler
681	395508	Needle Valve Kit
720	93474	Pin—Gear to Shaft
721	221779	Stop—Drive Shaft
725	223725	Shield—Heat
727	280336	Cover Base—Electric Starter
729	280470	Clip—Wire
741	261533	Gear—Timing
764	395874	Starter Assembly—Vertical Pull (81" Rope)
	Note:	**396082** Starter Assembly—Vertical Pull (48-5/8" Rope)
765	395914	Housing—Vertical Pull Starter
766	280022	Pulley—Rope (Small)
767	231048	Pin—Small Rope Pulley
768	395870	Pulley and Gear Assembly—Starter (81" Rope)
769	280406	Rope—Vertical Pull Starter (81")
	Note:	If longer rope is needed, Order No. **280399** and cut to required length. **66734** Rope—Vertical Pull Starter (48-5/8")
771	299961	Clip—Vertical Pull
774	280121	Insert—Starter Handle
775	280036	Grip—Starter Rope
776	222049	Guide—Rope
777	390066	Spring—Vertical Pull Starter
778	280021	Cover—Vertical Pull Starter Pulley

REF. NO.	PART NO.	DESCRIPTION
782	†280036	Gear—Electric Starter Spur
783	†261606	Gear—Electric Starter Pinion
784	†223123	Cover—Electric Starter Clutch Gear
785	†271457	Gasket—Electric Starter Clutch Gear Cover
789	395624	Wiring Harness Assy.—Mower (4-1/2" long)
791	395569	Charger—Battery (120 Volt)
801	395851	Motor Output End Cover and Mounting Bracket
802	396061	Cap Assembly—End
803	396059	Housing—Starter
832	399637	Guard Group—Muffler
832A	396313	Guard—Muffler
842	270920	Seal—Filler Cap
847	399030	Filler Group—Oil (Used after Code Date 85051000)
	Note:	**395869** Filler Group—Oil (Used before Code Date 85051100)
851	221798	Terminal—Ignition Cable
852	396397	Cleaner Group—Air
853	394850	Bracket—Air Cleaner
869	210879	Seat—Intake Valve (Standard)
870	211291	Seat—Exhaust Valve (Standard)
	Note:	For Options, See Repair Manual
871	262001	Guide—Exhaust Valve
	Note:	**63709** Guide—Intake Valve See Repair Instruction Manual.
895	394767	Switch Group
897	394970	Trigger Coil Assy.
901	490818	Bracket—Bell Crank (Used after Code Date 86112300.)
	Note:	**223004** Bracket—Bell Crank (Used before Code Date 86112400.)
902	280271	Grommet—Screen
922	261647	Spring—Brake
923	394867	Brake Assembly—Band

†Included in Starter Drive Kit—Part No. 395727.

www.mymowerparts.com

For Briggs & Stratton Discount Parts Call 606-678-9623 or 606-561-4983

114900 to 114999

REF. NO.	PART NO.	DESCRIPTION
924	261881	Link—Starter Switch
925	280363	Cover—Linkage
928	223162	Bracket—Battery
929	93980	Screw—Sem
930	223161	Bracket Support—Battery
931	395559	Battery (6 Volt)
933	223187	Pivot—Band Brake
934	94037	Screw—Band Brake Pivot
935	223128	Terminal—Switch
936	280338	Actuator—Switch
937	†280366	Spline—Starter
938	† 93941	Ring—Retainer
939	395665	Shaft Assembly—Choke
940	222403	Guard—Flywheel
941	280395	Cover—Linkage
942	397668	Control Plate—Band Brake
	Note:	395393 Control Plate—Band Brake (Used before Code Date 84030200)
943	280322	Cover Top—Electric Starter
949	396579	Guard—Rewind Starter
963	223502	Strap
964	94107	Bolt—U
965	94108	Nut
988	223600	Bracket—Muffler
994	398067	Arrester—Spark
1012	280414	Retainer—Link
1016	490817	Spacer
1019	491099	Decal Kit

†Included in Starter Drive Kit—Part No. 395727.

www.mymowerparts.com