www.mymowerparts.com

FORM MS-8522-3/88
REPLACES FORM MS-8522-4/87
FILE IN SECT. 2 OF SERVICE MANUAL

Illustrated Parts List

Model Series

193700 to 193799

TYPE NUMBERS
0015, 0016, 0025
0110, 0111, 0114,
0115
0120 through 0162
0167 through 0174

TO FIND

THE CORRECT NUMBER OF THE PART YOU NEED:

FOLLOW THE INSTRUCTIONS BELOW

A. Refer to Engine Model, Type and Code Number that is stamped on the blower housing of engine. Engine type numbers such as 012301 are listed herein only as 0123. The two digits (01 or 02, etc.) to the right of the space are not needed for parts identification. Then use the *Illustrated Parts List covering the Model Series.*

B. Refer to Illustrated Parts section and compare the old part with illustration. The number on the illustration is the Reference Number. Assemblies include all parts shown in frames. All parts shown in assembly frames on which individual reference numbers are given can be purchased separately.

C. After the Reference Number has been identified, refer to the Numerical Parts List, where Reference and Master Part Number are listed. THE MASTER PART IS USED ON ALL TYPE NUMBERS EXCEPT THOSE TYPE NUMBERS UNDER "NOTE".

D. If a "Note" appears below the Master Part Number, this means that this part differs from the Master Part for certain types. If the Type number is listed under "Note", order the part referred to.

E. *If the Engine Type Number does not appear after any part number listed under "Note", use* the Master Part Number.

F. For Type Numbers higher than those covered by this book, please refer to the factory if you are unable to identify the part by comparison.

PRINTED IN U.S.A.

COPYRIGHT ©

ORIGINAL BRIGGS & STRATTON SERVICE PARTS ®

K&T Saw Shop 606-678-9623 or 606-561-4983

ww.mymowerparts.com

193700 to 193799

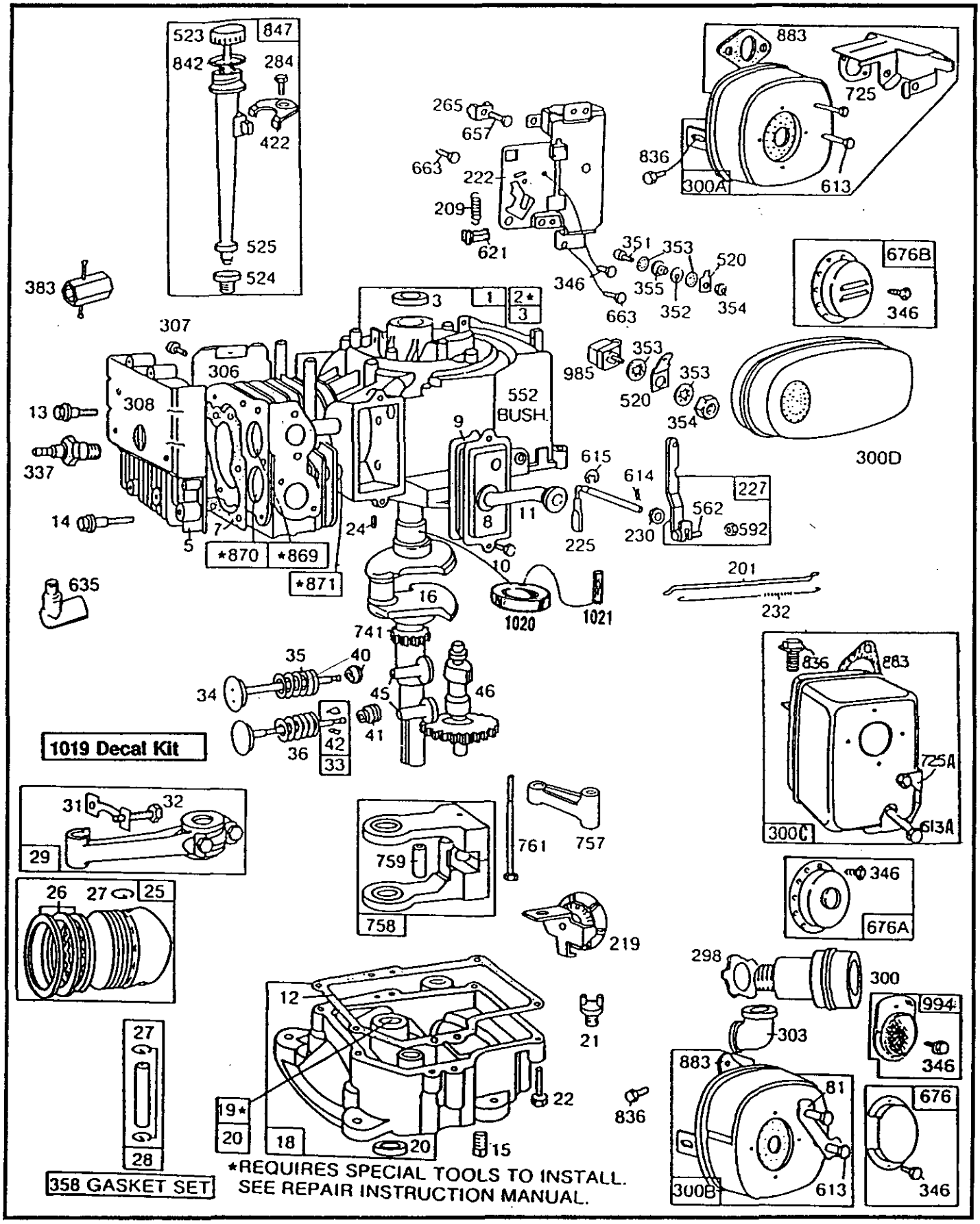

8522-1 Assemblies include all parts shown in frames. 18

K&T Saw Shop 606-678-9623 or 606-561-4983

www.mymowerparts.com

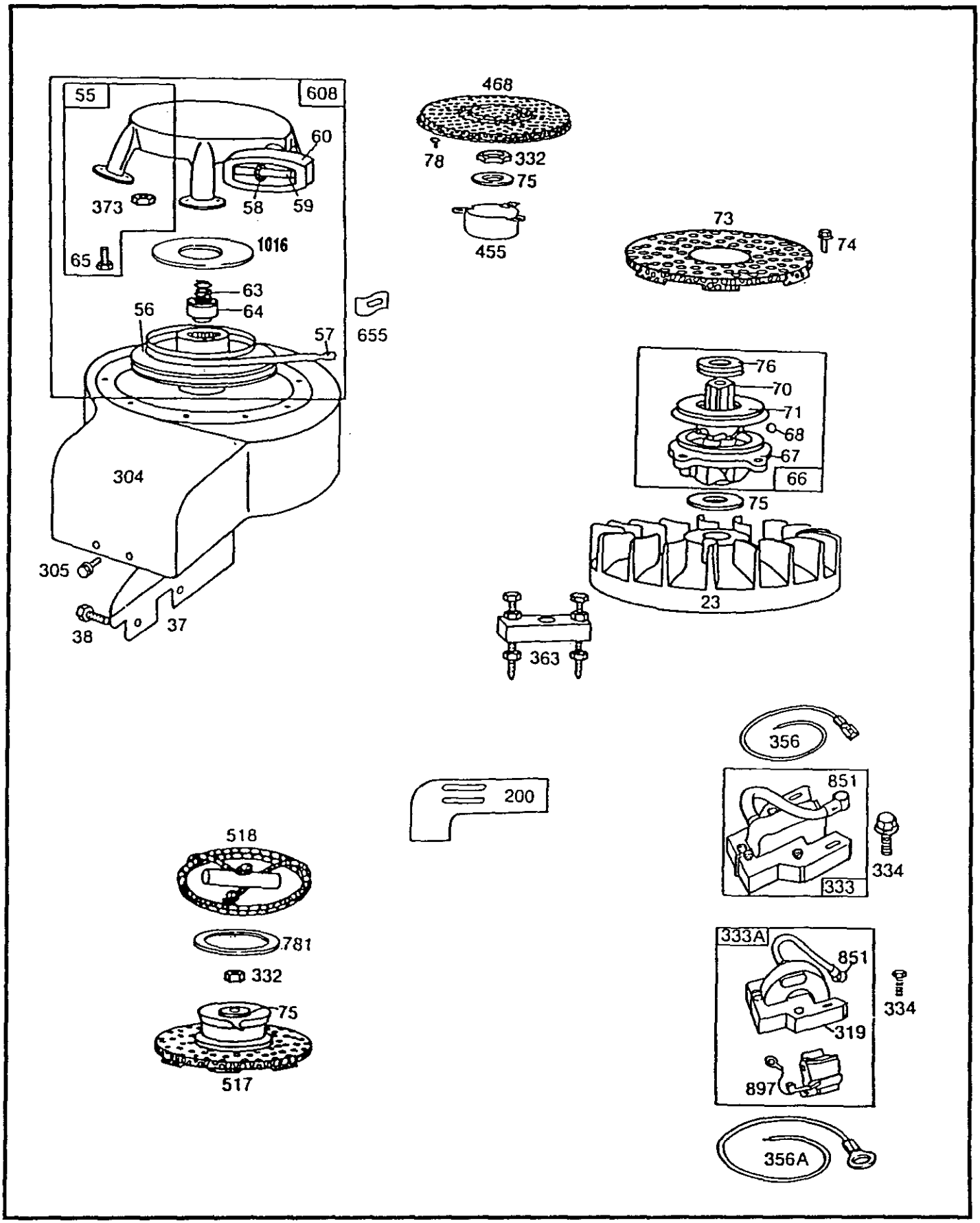

Assemblies include all parts shown in frames.

K&T Saw Shop 606-678-9623 or 606-561-4983

www.mymowerparts.com

193700 to 193799

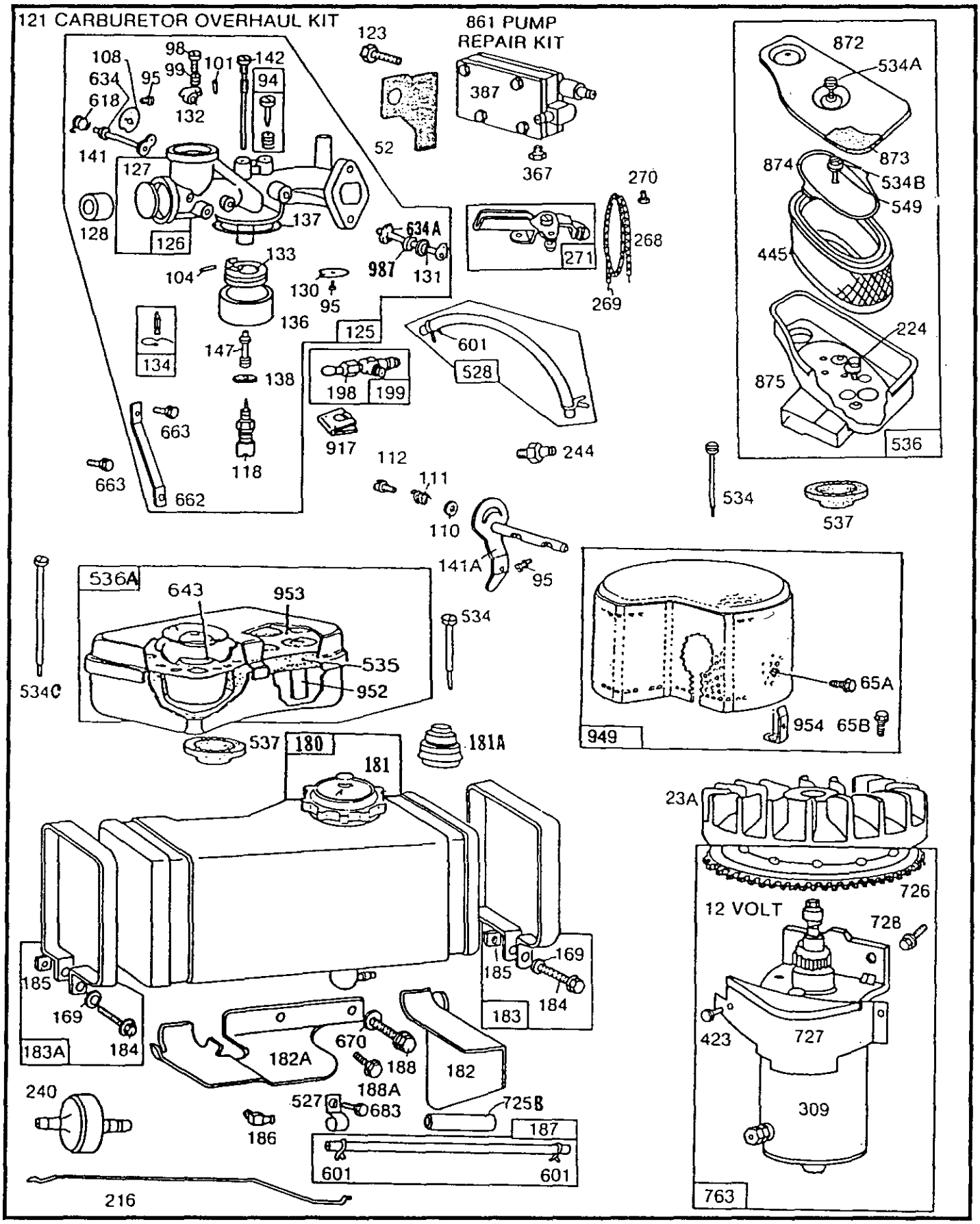

Assemblies include all parts shown in frames.

K&T Saw Shop 606-678-9623 or 606-561-4983

www.mymowerparts.com

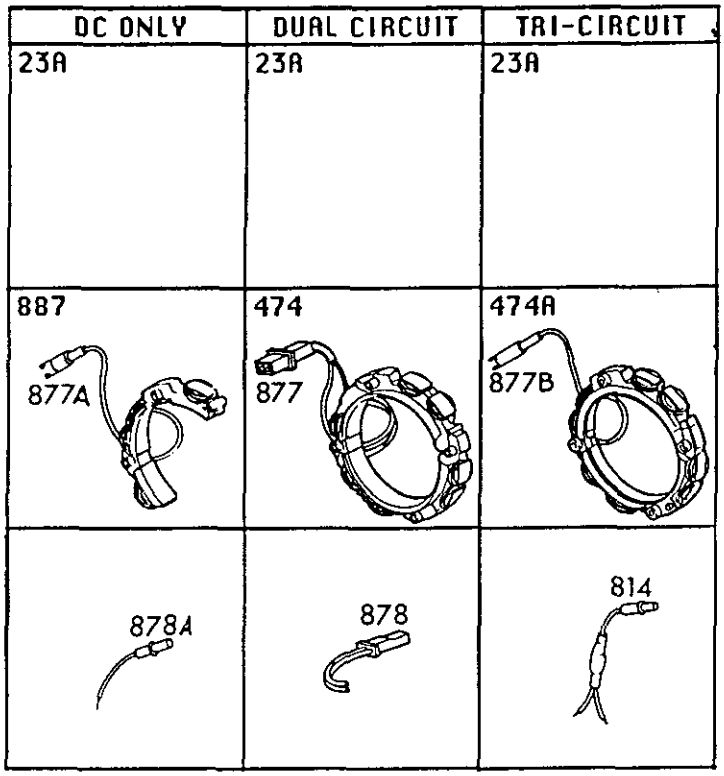

NOTE; All stators use No. 482 Mtg. Screw.

Assemblies include all parts shown in frames.

K&T Saw Shop 606-678-9623 or 606-561-4983

www.mymowerparts.com

193700 to 193799

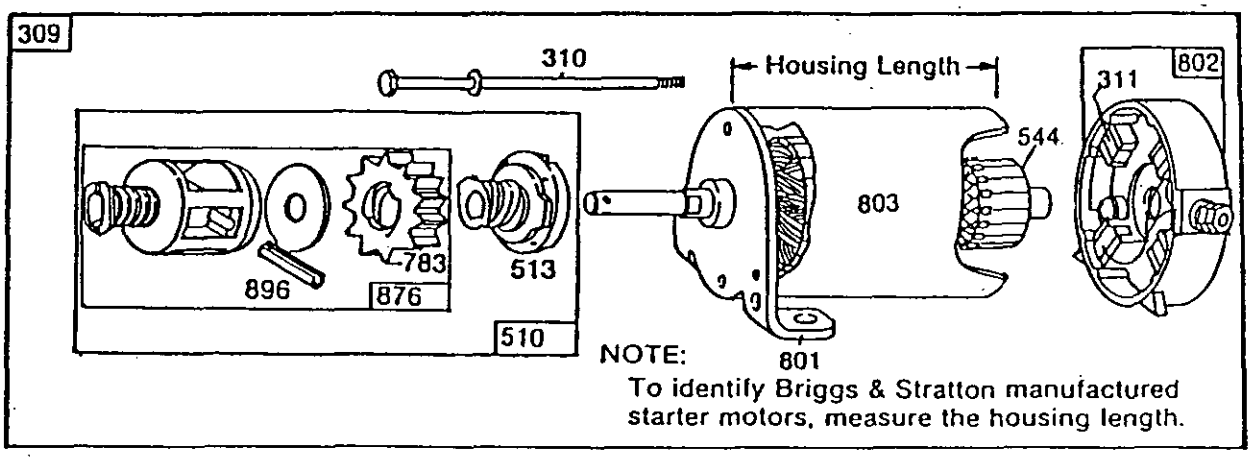

Reference Number		309	310	311	510	544	801	802	803
Manufacturer		Motor and Control Ass'y.	Thru Bolt Assembly	Brush Assembly	Drive Assembly	Armature Assembly	Drive End Cap Assembly	End Cap Ass'y. Commutator	Housing Assembly
Briggs & Stratton	Housing Length								
12V	3-21/32"	394805	94003	395538	396865**	392747	394857	395537*	393825

*Includes Brush Set

**Includes #391135 Clutch Assembly (Ref. No. 513)
#280104 Gear (Ref. No. 783)
#393254 Retainer and Pin (Ref. No. 876)
93754 Roll Pin (Ref. No. 896)

K&T Saw Shop 606-678-9623 or 606-561-4983

www.mymowerparts.com

REF. NO.	PART NO.	DESCRIPTION
1	397240	Cylinder Assembly
2	261960	Bushing—Cylinder
	Note:	Requires special tools for installation.
3	294606	Seal—Oil
5	212286	Head—Cylinder
7	* 270430	Gasket—Cylinder Head
8	391406	Breather Assembly
	Note:	**299848** Breather Assembly Used on Type Nos. 0162, 0169, 0170. **392417** Breather Assembly Used on Type No. 0161
9	* 27803	Gasket—Valve Cover
10	93394	Screw—Sem
11	280005	Tube—Breather
12	* 27750	Gasket—Crankcase Cover—1/64" thick
	* 27876	Gasket—Crankcase Cover—.005" thick
	* 27877	Gasket—Crankcase Cover—.009" thick
13	93211	Screw—Cylinder Head (2-21/32" long)
	Note:	**93776** Stud—Cylinder Head **22963** Washer Used on Type Nos. 0148, 0161, 0171, 0172.
14	93723	Screw—Cylinder Head (3" long) 1 Req'd.
	Note:	**93781** Stud—Cylinder Head **22963** Washer Used on Type Nos. 0148, 0171, 0172
15	91084	Plug—Oil Drain
	Note:	**93418** Plug—Oil Drain (Hex. Socket) Used on Type No. 0171.
16	396876	Crankshaft
	Note:	Order Part **230978** for Timing Gear Pin Replacement.

* Included in Gasket Set—Part No. 299577.

REF. NO.	PART NO.	DESCRIPTION
		396877 Crankshaft Used on Type Nos. 0126, 0127, 0132, 0133.
18	392548	Base—Engine
	Note:	**397305** Base—Engine Used on Type No. 0171.
19	295963	Bushing—Engine Base
	Note:	Requires special tools for installation.
20	391086	Seal—Oil
21	66768	Plug—Oil Filler
22	93585	Screw—Base Mounting Sem
23	298260	Flywheel—Magneto
23A	391983	Flywheel and Ring Gear Assy.—Magneto For use on engines *WITH ALTERNATOR.* (Includes aluminum ring gear.)
	Note:	**392028** Flywheel—Magneto For Use on Engines *WITH ALTERNATOR* Machined to Accept Aluminum Ring Gear (Not Included) Used on Type No. 0143. **392034** Flywheel and Ring Gear Assy.—Magneto *For use only on electric* starter engines *WITHOUT ALTERNATOR* (Includes aluminum ring gear.)
24	222698	Key—Flywheel
25	393868	Piston Assy.—Std.
	393869	Piston Assembly—.010" O.S.
	393879	Piston Assembly—.020" O.S.
	393880	Piston Assembly—.030" O.S.

PISTON RING SETS:

Note: For Chrome Piston Ring Set—Standard Size—Order No. **299743.**

REF. NO.	PART NO.	DESCRIPTION
26	393881	Ring Set—Piston—Std.
	393882	Ring Set—Piston—.010" O.S.
	393883	Ring Set—Piston—.020" O.S.
	393884	Ring Set—Piston—.030" O.S.
27	68546	Lock—Piston Pin
28	295840	Pin Assembly—Piston—Standard
	295841	Pin Assembly—Piston—.005" O.S.
29	390402	Rod Assy.—Connecting
	Note:	*For Connecting Rod* with .020" Undersize Crankpin Bore—Order No. **390773.**
31	222114	Lock—Connecting Rod Screw
32	92659	Screw—Connecting Rod
33	390420	Valve—Exhaust
34	261055	Valve—Intake
35	65906	Spring—Intake Valve
36	26828	Spring—Exhaust Valve
37	222475	Guard—Flywheel
	Note:	**222402** Guard—Flywheel Used on Type No. 0143.
38	93777	Screw—Sem
	Note:	**93535** Screw—Sem (2) **22963** Washer (6) Used to Mount Flywheel Guard *Used on Type No.* 0143.
40	221596	Retainer—Intake Valve
41	292260	Rotocoil—Exhaust Valve
42	93630	Retainer—Exhaust Valve Rotocoil (2)
45	260933	Tappet—Valve
46	211689	Gear—Cam
52	* 270824	Gasket—Carburetor Mounting
	Note:	**270538** Gasket—Carburetor Mounting Used on Type No. 0162.
55	393576	Housing—Rewind Starter
56	295871	Pulley—Rewind Starter

K&T Saw Shop 606-678-9623 or 606-561-4983

ww.mymowerparts.com

193700 to 193799

REF. NO.	PART NO.	DESCRIPTION
	Note:	Includes 63" Rope; if longer Rope is required, Order Rope No. **66894** and cut to required length.
57	**490179**	Spring—Rewind Starter
58	**66884**	Rope—Rewind Starter—63" long; if longer Rope is needed, Order No. **66894** and cut to required length.
59	**230228**	Pin—Starter Grip
60	**66728**	Grip—Starter Rope
63	**260414**	Spring—Ratchet
64	**230543**	Adapter—Ratchet Spring
65	**94128**	Screw—Rewind Starter Housing Mtg. Sem
65A	**94018**	Screw—Hex. Washer Head
65B	**93067**	Screw—Hex. Hd. Sem
66	**399671**	Clutch Assembly—Rewind Starter (Uses Rubber Coated Retainer Washer—Ref. 71)
	Note:	**394558** Clutch Assy.—Rewind Starter (Uses Non-Coated Retainer Washer—Ref. 71)
67	**394897**	Housing—Rewind Starter Clutch
68	**63770**	Ball—Clutch
70	**298799**	Ratchet—Rewind Starter Clutch
71	**394506**	Washer—Clutch Retainer (Rubber Coated)
	Note:	**221653** Washer—Clutch Retainer (Non-Coated)
73	**221796**	Screen—Rewind Starter
74	**93042**	Screw—Sem
75	**220865**	Washer—Spring
76	**68238**	Washer—Ratchet Sealing
78	**93805**	Screw—Sem
81	**222263**	Lock—Screw
94	**†292681**	Valve Assembly—Carburetor Idle
95	**93499**	Screw—Throttle and Choke Valve Mtg. Sem
98	**91920**	Screw—Machine, Fill. Hd. 8-32 x 5/8"
99	**26157**	Spring—Throttle Adjustment
101	**93043**	Pin—Throttle Stop
104	**†230896**	Pin—Float Hinge
108	**222010**	Valve—Choke
110	**220899**	Washer—Choke Lever
111	**26229**	Spring—Choke Lever
112	**23270**	Screw—Choke Lever
118	**†396568**	Valve—Needle
121	**394698**	Carburetor Overhaul Kit
123	**93357**	Screw—Carburetor Mtg.
125	**390811**	Carburetor Assembly (Choke-A-Matic®)
	Note:	**390411** Carburetor Assembly (Manual Choke) Used on Type Nos. 0016, 0110, 0111, 0114, 0115, 0122, 0124, 0135, 0139, 0150, 0159, 0160, 0167, 0173.
126	**299851**	Body Assembly Carburetor
127	**†221997**	Plug—Welch
128	**211682**	Venturi—Carburetor
130	**221986**	Valve—Throttle
131	**490017**	Shaft and Lever—Throttle
	Note:	**391512** Shaft and Lever—Throttle (Used before Code Date 86071700.)
132	**211712**	Stop—Throttle
133	**299707**	Float—Carburetor
134	**†394681**	Valve—Fuel Inlet
136	**221995**	Bowl—Float
137	**†270511**	Gasket—Float Bowl
138	**†222014**	Washer—Float Bowl
141	**390684**	Shaft and Lever—Choke
141A	**299647**	Shaft and Lever—Manual Choke
142	**†299740**	Nozzle—Carburetor
147	**†231323**	Screw—Nozzle
169	**90832**	Washer—Lock—1/4 x 3/32 x 5/64"
180	**390225**	Tank Assembly—Fuel (3 Quart)
181	**397975**	Cap—Fuel Tank (2-1/4" I.D.) (Non-Metal) (Used after Code Date 85113100.)
181A	**392300**	Cap—Fuel Tank (1-9/16" I.D.) (Metal) (Used before Code Date 85120100.)
182	**222813**	Bracket—Fuel Tank (R.H.)
182A	**222112**	Bracket—Fuel Tank (L.H.)
	Note:	**223157** Support—Fuel Tank **93158** Sem—Screw Used in Addition to **222112** Bracket—Fuel Tank Used on Type Nos. 0144, 0145, 0171.
183	**390406**	Strap Assy.—Fuel Tank (R.H.)
183A	**390405**	Strap Assy.—Fuel Tank (L.H.)
184	**93803**	Screw—Hex. Hd.
185	**90970**	Nut—Square, 1/4-20
186	**67218**	Connector—Fuel Pipe
187	**296004**	Line—Fuel (23" long)
	Note:	**393815** Line—Fuel (11" long)
188	**93634**	Screw—Hex Head
188A	**93535**	Screw—Sem
198	**293934**	Valve—Fuel Shut-Off
199	**390303**	Connector—Fuel Pipe
	Note:	**295896** Outlet Assembly Used on Type Nos. 0162, 0169, 0170.
200	**221760**	Guide—Air
201	**261611**	Link—Governor
209	**261306**	Spring—Governor
	Note:	**260871** Spring—Gov. Used on Type Nos. 0140, 0143, 0146, 0149, 0151, 0152.
216	**261612**	Link—Choke
219	**392718**	Oil Slinger, Gov. Gear and Bracket Assembly

† Included in Carburetor Overhaul Kit—Part No. 394698.

K&T Saw Shop 606-678-9623 or 606-561-4983

www.mymowerparts.com

REF. NO.	PART NO.	DESCRIPTION
222	390784	Plate—Gov. Control (Choke-A-Matic) (Used after Code Date 85041400.)
	396199	Plate—Gov. Control (Used before Code Date 85041500.)
	Note:	390746 Plate—Gov. Control (Manual Choke) Used on Type Nos. 0016, 0110, 0111, 0114, 0115, 0122, 0124, 0135, 0139, 0150, 0159, 0160, 0167, 0173.
224	94018	Screw—Sem
225	231058	Crank—Governor (1/4" Dia.)
227	391733	Lever Assy.—Governor For 1/4" Dia. Crank
230	222450	Washer—Gov. Lever (1/4" I.D.)
232	261911	Spring—Governor Link
240	298090	Filter—Fuel
	Note:	394358 Filter—Fuel Used on Type Nos. 0161, 0167, 0168.
244	230318	Connector—Fuel Pipe
265	221535	Clamp—Casing
268	65616	Casing—Control Wire—72" long
	Note:	If longer casing is required, specify length in inches; if shorter casing is needed, Order No. 65616 and cut to required length.
269	26633	Wire—Control—78" long
	Note:	If longer wire is required, specify length in inches; if shorter wire is needed, Order No. 26633 and cut to required length.
270	63426	Locknut—Control Wire Casing
271	290568	Lever Assy.—Control
284	93804	Screw—Clamp Mtg.
298	261409	Locknut—Muffler
300	393010	Muffler—Exhaust (Round Lo-Tone)
300A	398507	Muffler—Exhaust
300B	391313	Muffler—Exhaust
300C	399355	Muffler—Exhaust
300D	392101	Muffler—Exhaust
303	91205	Elbow—Muffler—90°
	Note:	94089 Elbow—Muffler—45° Used on Type No. 0135.
304	391395	Housing—Blower
	Note:	391379 Housing—Blower Used on Type Nos. 0025, 0114, 0115, 0127, 0129, 0133, 0134, 0137, 0138, 0142, 0145, 0147, 0148, 0149, 0151, 0152, 0154, 0155, 0156, 0159, 0160, 0169, 0172, 0174. 393981 Housing—Blower Used on Type No. 0161. 491595 Housing—Blower (Includes Fuel Tank Assy.) Used on Type No. 0170.
305	93158	Screw—Blower Housing Mounting Sem
306	222830	Shield—Cylinder
307	93163	Screw—Cylinder Shield Mtg. Sem
308	222636	Cover—Cylinder Head
309		Motor—Starting (12 Volt) **See Chart for Replacement Parts for Starting Motors on Page 6.**
319	395326	Armature Assembly (Less Trigger Coil)
332	92284	Nut—Flywheel
333	398811	Armature Assembly
333A	395492	Armature Assembly
334	93381	Screw—Armature Mounting Sem
337	298809	Plug—Spark (1-1/2" high—37-42 M.M.)
	Note:	293918 Plug—Spark (1-1/2" high—37 M.M.) (Resistor Type)
346	93705	Screw—Sem
351	93735	Screw—Terminal (Truss Hd.)
352	66068	Washer—Insulating
353	92791	Washer—Lock—Shakeproof (3)
354	90576	Nut—Hex.—8-32 (2)
355	66554	Collar—Insulating
356	398808	Wire—Ground Used with Armature Ref. 333 Only.
356A	298693	Wire—Ground (30" long—cut to suit) Used with Armature Ref. 333A.
358	299577	Gasket Set
363	19165	Puller—Flywheel
367	93380	Screw—Sem
373	92987	Nut—Hex. (4)
383	89838	Wrench—Spark Plug
387	390818	Pump—Impulse
	Note:	Order No. 394462 for Pump Repair Kit
422	222502	Clamp—Oil Filler Tube
423	93984	Screw—Sem
445	393406	Cartridge—Air Cleaner
455	222561	Cup—Screen Mounting
468	222562	Screen—Flush Rotating
474	393474	Stator—Alternator
474A	392595	Stator—Alternator
482	93621	Screw—Sem
517	295423	Pulley—Rope Starter (with Screen)
518	69932	Rope—Starter
520	93722	Terminal—Spade
523	391840	Cap and Dipstick—Oil Filler
524	68838	Seal—Filler Tube
525	280133	Tube—Oil Filler
527	221428	Clamp (2)
528	393815	Line—Vent
534	93323	Screw—Air Cleaner
534A	93913	Screw—Air Cleaner
534B	93881	Screw—Air Cleaner
534C	93622	Screw—Air Cleaner
535	270528	Element—Air Cleaner
536	393481	Cleaner Assy.—Air

K&T Saw Shop 606-678-9623 or 606-561-4983

www.mymowerparts.com

193700 to 193799

REF. NO.	PART NO.	DESCRIPTION
536A	390379	Cleaner Assy.—Air
	Note:	**391399** Cleaner Assembly—Air
		Uses:
		280111 Support—Air Cleaner Element (Plastic)
		Used on Type Nos. 0168, 0170, 0172.
537	270539	Gasket—Air Cleaner
549	270978	Washer—Air Cleaner
552	231055	Bushing—Gov. Crank (1/4" I.D.)
562	92613	Bolt—Governor Lever
592	231082	Nut—Hex., 10-24
601	93053	Clamp—Fuel Pipe
608	390391	Starter Assy.—Rewind
613	94042	Screw—Muffler
613A	94054	Screw—Muffler
614	93306	Cotter—Hair Pin
615	93307	Retainer—E-Ring
618	261116	Spring—Choke Return
621	396847	Switch—Stop (Used after Code Date 85041400.)
	Note:	**297472** Switch—Stop (Used before Code Date 85041500.)
634	270382	Washer—Choke Shaft
634A	271013	Washer—Throttle Shaft (Foam) (Used before Code Date 86071700.)
635	66538	Elbow—Spark Plug
643	222149	Cup—Air Cleaner
655	222598	Anchor—Spring
657	93496	Screw—Sem
662	222027	Bracket—Carburetor
663	93572	Screw
670	22963	Spacer—Fuel Tank
	Note:	**22776** Washer—Tank Bracket
		Used on Type Nos. 0169, 0173.
676	393757	Deflector—Exhaust
	Note:	**393761** Deflector—Exhaust
		Used on Type No. 0161.
676A	395700	Deflector—Exhaust (Direct Outlet)
676B	393758	Deflector—Exhaust
683	93572	Screw
725	223540	Shield—Muffler
725A	223645	Shield—Muffler
725B	222175	Shield—Fuel Pipe, Heat
726	392134	Gear—Ring (Aluminum) (Includes Mounting Parts)
727	395405	Cover—Starter (Includes Mounting Screws)
728	93535	Screw—Sem
741	261195	Gear—Timing
757	212359	Link—Counterweight
758	390172	Counterweight Assy.
759	298909	Pin—Counterweight
761	93874	Screw—Counterweight
763	391604	Electric Starter Kit—12 volt (Gear Drive)
781	280068	Cap—Starter Pulley
800	222095	Retainer
836	93559	Screw—Sem
842	270920	Seal—Filler Cap
847	392066	Filler Group—Oil
851	221798	Terminal—Ignition Cable
861	394462	Pump Repair Kit (Walbro)
869	211661	Seat—Intake Valve (Standard)
870	210940	Seat—Exhaust Valve (Standard)
871	261961	Guide—Exhaust Valve
	Note:	**231218** Guide—Intake Valve (Brass)
		See Repair Manual.
872	397981	Cover—Air Cleaner
873	397972	Gasket—Air Cleaner Cover
874	222898	Plate—Air Cleaner Cartridge
875	397320	Body—Air Cleaner
877	393456	Diode and Connector Assy. (Dual Circuit)
877A	393814	Diode and Connector Assy. (D. C.)
877B	393537	Diode and Connector Assy. (Tri-Circuit)
878	393362	Alternator Harness Assy. (Dual Circuit)
878A	393422	Alternator Harness Assy. (D.C.)
883	270918	Gasket—Exhaust Pipe
887	391529	Stator Assembly—Alternator (D. C.)
897	394970	Trigger Coil
917	223271	Valve Handle—Fuel Shut-Off
949	397530	Guard—Debris
952	222495	Spacer—Air Cleaner
953	222022	Screen—Air Cleaner
954	223379	Bracket—Mounting
985	398525	Insulator Assembly
987	398970	Seal—Throttle Shaft (Used after Code Date 86071600.)
994	399541	Arrester—Spark
1016	490817	Spacer
1019	491185	Decal Kit
1020	261190	Eccentric (Used after Code Date 85020100.)
1021	94160	Pin—Eccentric (Used before Code Date 85020100.)

K&T Saw Shop 606-678-9623 or 606-561-4983

www.mymowerparts.com

ORIGINAL

BRIGGS & STRATTON

SERVICE PARTS ®

K&T Saw Shop 606-678-9623 or 606-561-4983