www.mymowerparts.com

FORM MS-4355-16
Illustrated Parts List
Model Series
140200 to 140257
TYPE NUMBERS
0010 to 0016
0110 to 0149
9020 to 9139
504010 to 504033
505010 to 505033
Model Series
141200 to 141257
TYPE NUMBERS
0110 to 0139
9120 to 9138
504510 to 504552
505510 to 505532

K&T Saw Shop 606-678-9623 or 606-561-4983

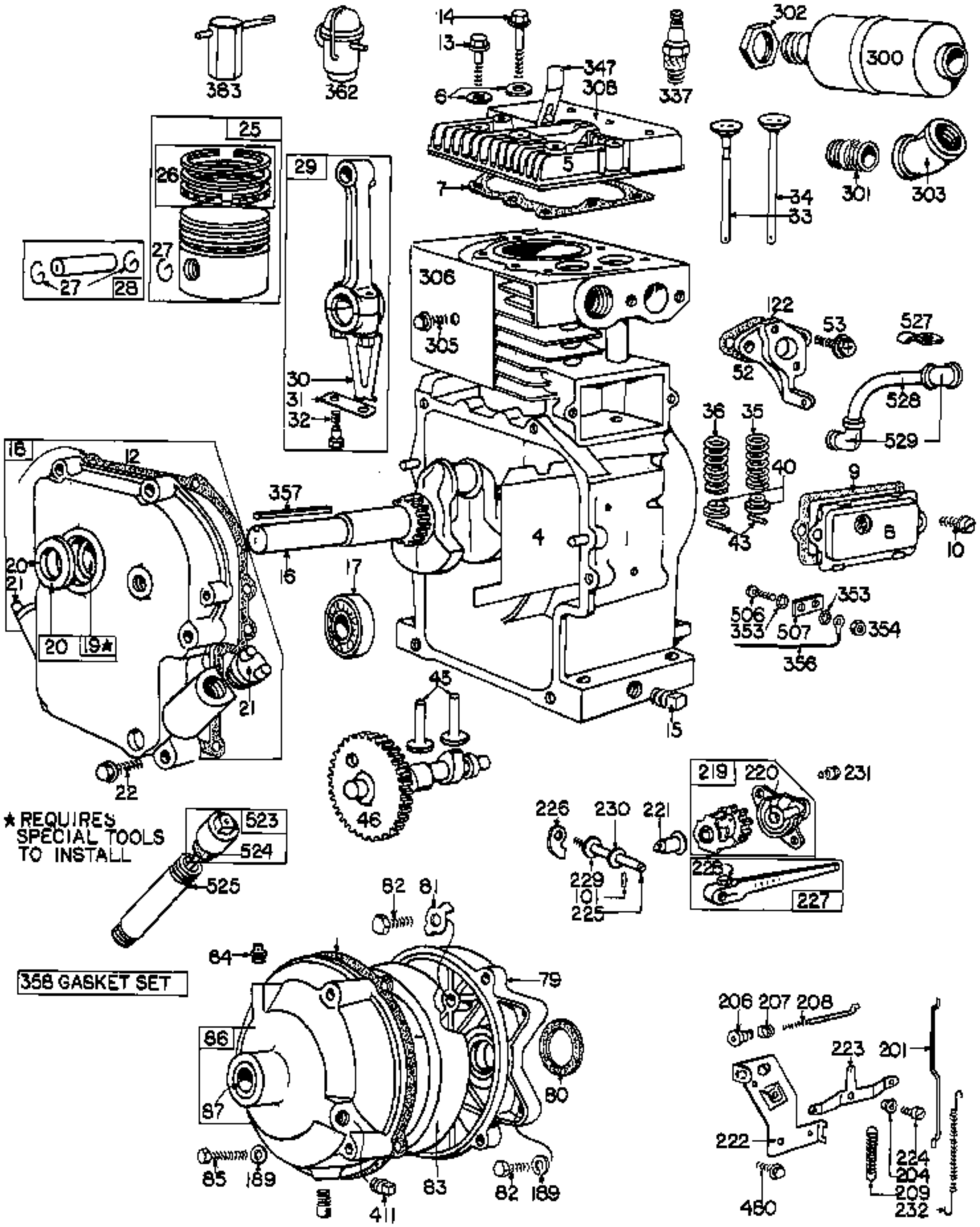
383
362
14
13
6
347
308
337
302
300
25
26
27
28
29
5
7
34
33
301
303
306
305
30
31
32
122
53
527
52
528
529
36
35
40
43
9
8
10
16
12
357
4
20
21
19★
17
506
353
507
354
356
45
15
22
46
★ REQUIRES SPECIAL TOOLS TO INSTALL
523
524
525
226
230
221
229
101
225
219
220
231
228
227
82
81
84
358 GASKET SET
79
86
87
80
85
189
83
82
189
411
206
207
208
223
201
222
224
204
209
232
460

www.mymowerparts.com

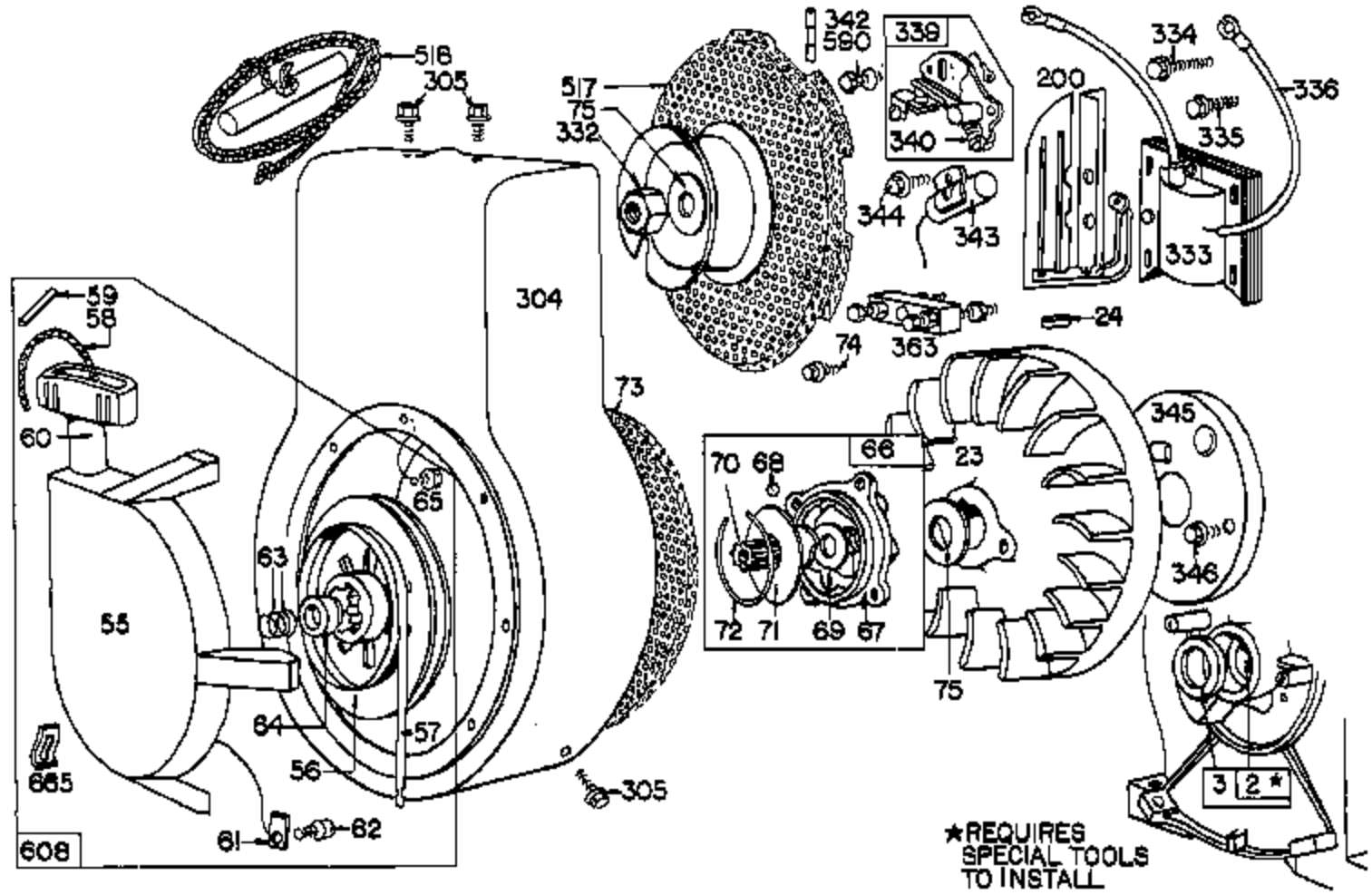

K&T Saw Shop 606-678-9623 or 606-561-4983

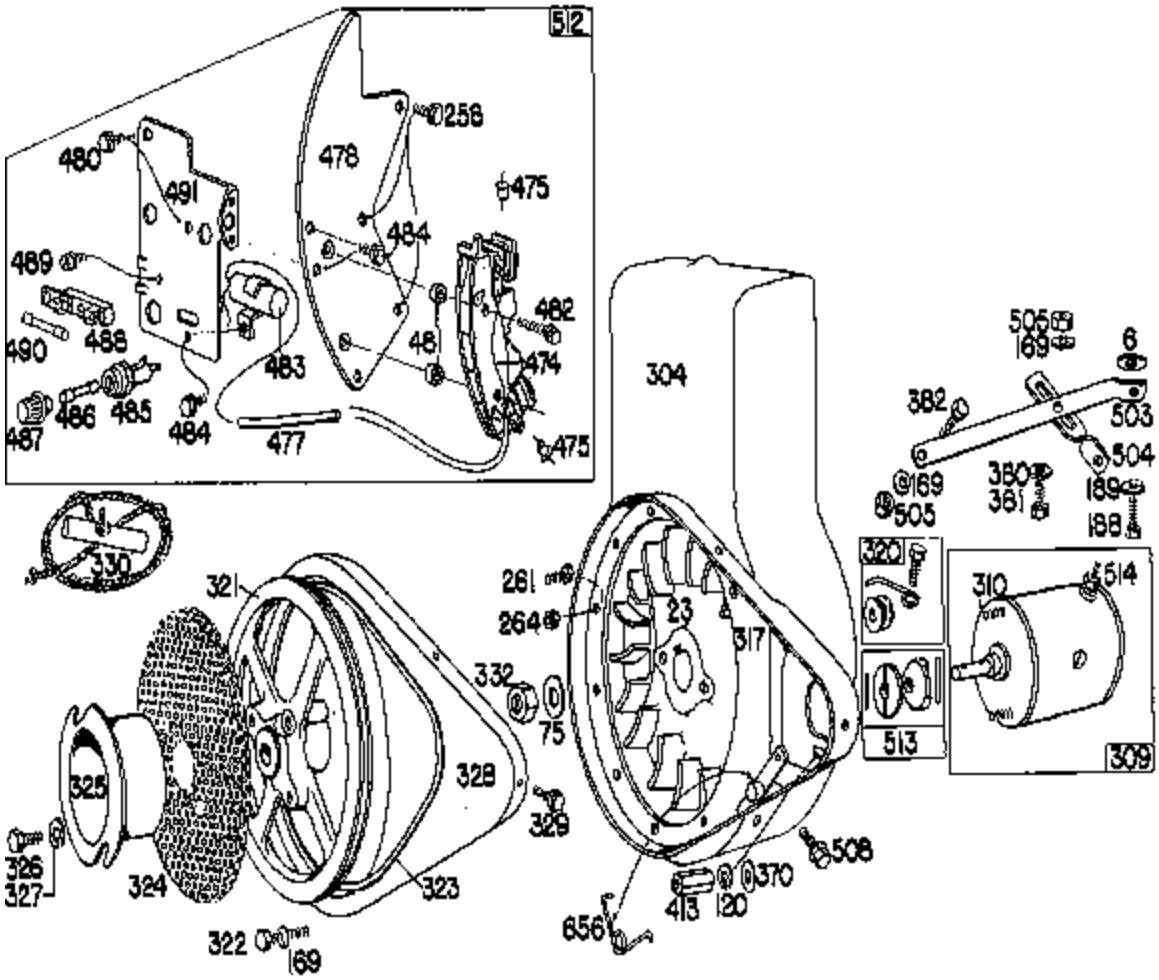
512
258
478
480
491
475
484
489
482
490
488
483
481
474
487
486
485
484
477
475
304
505
169
6
382
503
504
169
380
381
189
505
188
330
321
261
264
23
317
320
310
514
332
75
513
309
325
328
329
326
327
324
323
322
169
656
413
120
370
508

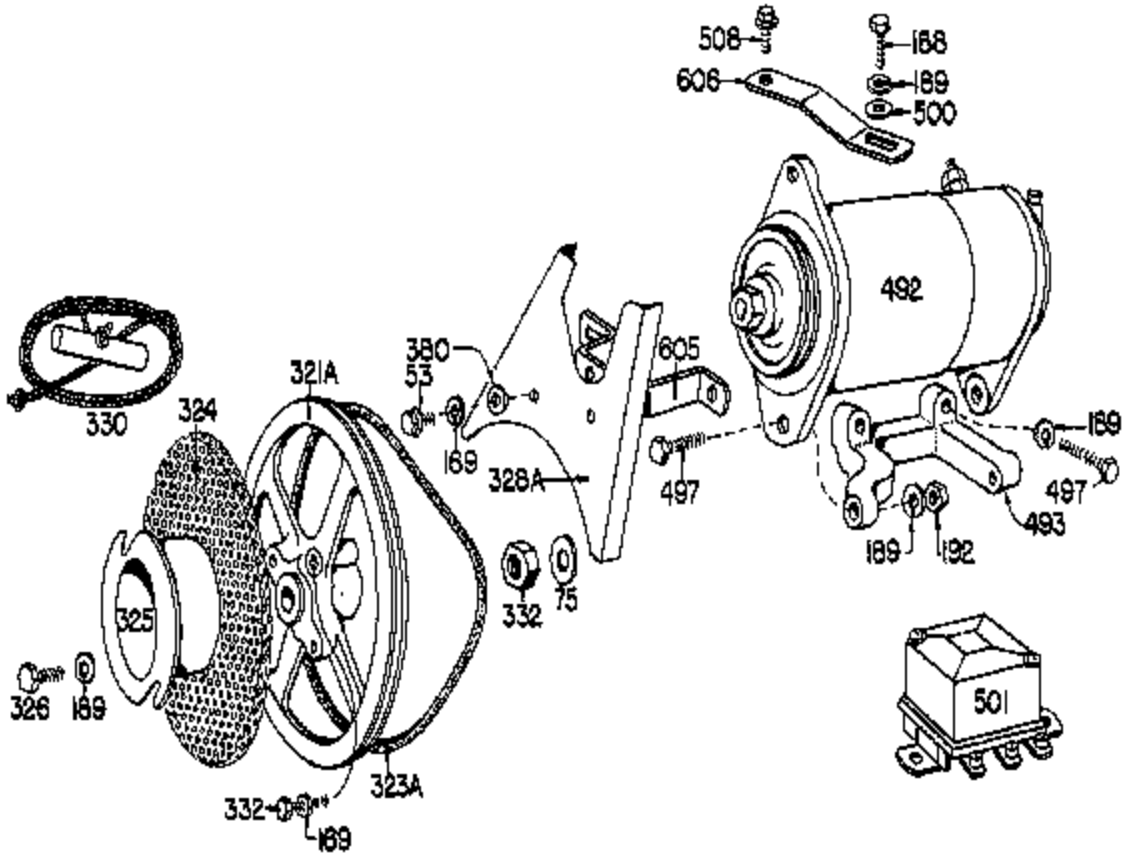
508
188
606
189
500
492
380
53
605
321A
330
324
169
328A
497
189
497
493
189
192
332
75
325
326
189
501
323A
332
169

www.mymowerparts.com

1	297723	Cylinder Assembly "Kool Bore"* Used on Model 140200 Series.
	Note:	297913 Cylinder Assy. Used on Model 140200 Series type Nos. 0140, 9138, 504031.
	296953	Cylinder Assembly (Sleeve Bore) Used on Model 141200 Series.
	Note:	297266 Cylinder Assy. (Sleeve Bore) Used on Model 141200 Series type Nos. 0137, 504530, 504541, 504543, 504550.
2	295962	Bushing--Cylinder
	Note:	Requires special tools for installation.
3	294606	Seal-Oil
4	221001	Plate-Cylinder Baffle
5	210578	Head-Cylinder
6	22963	Washer-PIain
7	†270340	Gasket-Cylinder Head
8	294948	Breather Assembly
9	†27803	Gasket-Valve Cover
10	93394	Screw-Breather Mtg. Sem
12	†27750	Gasket-Crankcase Cover--1/64" thick †27876 Gasket-Crankcase Cover--005" thick †27877 Gasket-Crankcase Cover--. 009" thick
13	93210	Screw-Cylinder Head (2-9/32" long)
14	93211	Screw-Cylinder Head (2-21/32" long)
15	91084	Plug--Oil Drain
16	260315	Crankshaft
	Note:	260356 Crankshaft Used on Model 141200 Series type No. 505531.
		260358 Crankshaft Used on Model 140200 Series type Nos. 0115, 0116, 9128, 9129, 504015, 504016, 504017, 504018, 504019, 505015; also used on Model 141200 Series type Nos. 0115, 0116, 9127, 9128, 504515, 504516, 504517,

K&T Saw Shop 606-678-9623 or 606-561-4983

504518, 504519,
504527, 505515,
505516, 505517,
505518.
260359 Crankshaft
Used on Model 140200
Series type Nos.
9134, 9138, 505025,
505031;
also used on Model
141200 Series type
Nos. 505526, 505528.
260389 Crankshaft
Used on Model 140200
Series type Nos.
0120, 0121, 0148,
504020, 504021,
504022, 504023,
504024; also used on
Model 141200 Series
type Nos. 0120,
0121, 0131, 504520,
504521, 504522,
504523, 504524,
504530, 504531,
504533, 504542,
504547, 504551,
505520, 505521,
505522, 505523,
505524.
260407 Crankshaft
Used on Model 141200
Series type No.
504548.
260423 Crankshaft
Used on Model 140200
Series type Nos.
0131, 0133, 504027,
504029;
also used on Model
141200 Series type
Nos. 504526, 504549.
260425 Crankshaft
Used on Model 140200
Series type Nos.
0138, 0143, 9126,
9127, 9136, 504028,
505010, 505011,
505032; also used on
Model 141200 Series
type Nos. 0130, 0135,
0136, 0137, 0138,
9125, 9126, 9138,
504528, 504534,
504543, 504544,
504550, 505510,
505511, 505512,
505513, 505514,

505527, 505532.
260644 Crankshaft
Used on Model 140200
Series type Nos.
9024, 505030; also
used on Model 141200
Series type No.
505530.

www.mymowerparts.com

		260663 Crankshaft Used on Model 141200 Series type Nos. 0129, 504535. 260833 Crankshaft Used on Model 140200 Series type No. 9137.
17	29530	Bearing--Ball
18	295868	Cover Assy.--Crankcase
Note:		295876 Cover Assy.-Crankcase Used on Model 140200 Series type Nos. 0135, 504025. 295958 Cover Assy. -Crankcase Used on Model 140200 Series type Nos. 0115, 0116, 0131, 0133, 0138, 0143, 9128, 9129, 9134, 9136, 9138, 504015, 504016, 504017, 504018, 504019, 504027, 504028, 504029, 505015, 505025, 505031, 505032; also used on Model 141200 Series type Nos. 0115, 0116, 0129, 0130, 0135, 0136, 0137, 0138, 9127, 9128, 504515, 504516, 504517, 504518, 504519, 504526, 504527, 504528, 504534, 504535, 504543, 504544, 504549, 504550, 505515, 505516, 505517, 505518, 505526, 505527, 505528. 296075 Cover Assy.-Crankcase Used on Model 140200 Series type Nos. 0120, 0121, 0148, 504020, 504021, 504022, 504023, 504024; also used on Model 141200 Series type Nos. 0120, 0121, 0131, 504520, 504521, 504522, 504523, 504524, 504530, 504531, 504533, 504542, 504547, 504551, 505520, 505521, 505522, 505523, 505524. 296184

K&T Saw Shop 606-678-9623 or 606-561-4983

www.mymowerparts.com

		Cover Assy.-- Crankcase Used on Model 140200 Series type Nos. 9126, 9127, 9137, 505010, 505011; also used on Model 141200 Series type Nos. 9125, 9126, 9138, 505510, 505511, 505512, 505513, 505514, 505531, 505532. 296321 Cover Assy.-- Crankcase Used on Model 140200 Series type Nos. 9024, 505030; also used on Model 141200 Series type No. 505530.
19	295964	Bushing-Crankcase Cover
Note:		
		Requires special tools for installation.
20	298423	Seal-Oil
21	66768	Plug-Oil Filler
22	93205	Screw-Crankcase Cover Mounting Sem
23	295214	Flywheel
Note:		
		296335 Flywheel-Mag. Used on Model 140200 Series type Nos. 5a4014, 504019, 504024; also used on Model 141200 Series type Nos. 0144, 504514, 504519, 504524, 505514, 505519, 505524.
24	61760	Key-FlywheeI

MODEL 140200 SERIES PISTON ASSEMBLIES FOR "KOOL BORE"*

25	297692	Piston Assembly-Std.
	297693	Piston Assembly-.010" O.S.
	297694	Piston Assembly-.020'' O.S.
	297695	Piston Assembly-.030'' O.S.

MODEL 1412 SERIES PISTON ASSEMBLIES (FOR SLEEVE BORE)

	295842	Piston Assembly-Std.
	295846	Piston Assembly-.010'' O.S.
	295848	Piston Assembly--.020'' O.S.
	295850	Piston Assembly-.030'' O.S.

K&T Saw Shop 606-678-9623 or 606-561-4983

www.mymowerparts.com

MODEL 140200 SERIES PISTON

RING SETS FOR ''KOOL BORE''*

26	297815	Ring Set-Piston-Std. Consists of: 210600 Ring, Piston, Comp., Top, Std. 211037 Ring, Piston, Comp., Center, Std. 210602 Ring, Piston, Oil, Std.
	297705	Ring Set-Piston-- .010'' O.S. Consists of: 211241 Ring, Piston, Comp., Top, .010'' O.S. 211244 Ring, Piston, Comp., Center, 010'' O.S. 211247 Ring, Piston, Oil, 010'' O.S.
	297706	Ring Set-Piston- .020'' O.S. Consists of: 211242 Ring, Piston, Comp., Top .020" O.S. 211245 Ring, Piston, Comp., Center, .020'' O.S. 211248 Ring, Piston, Oil, .020" O.S.
	297707	Ring Set-Piston- .030" O.S. Consists of: 211243 Ring, Piston, Comp., Top, 030" O.S. 211246 Ring, Piston, Comp., Center, .030'' O.S. 211249 Ring, Piston, Oil, .030'' O.S.

MODEL 1412 SERIES PISTON

RING SETS (FOR SLEEVE BORE)

295852	Ring Set-Piston-Std. lncludes: 210703 Ring, Piston, Comp., Top Standard 210601 Ring, Piston, Comp., Center, Standard 295843 Ring Piston, Oil Standard (with expander)

K&T Saw Shop 606-678-9623 or 606-561-4983

www.mymowerparts.com

	295853	Ring Set-Piston-- .010" O. S. lncIudes: 210889 Ring, Piston, Comp., Top, .010" O.S. 210890 Ring, Piston, Comp., Center, .010" O.S. 295847 Ring, Piston, Oil, .010" O.S.(with expander)
	295854	Ring Set-Piston-- .020" O. S. lncludes: 210893 Ring Piston, Comp., Top, .020" O.S. 210894 Ring, Piston, Comp., Center, .020", O.S. 295849 Ring Piston, Oil, .020" O.S. (with expander)
	295855	Ring Set-Piston-- .030" O.S. lncludes: 210897 Ring, Piston, Comp., Top, .030" O. S. 210898 Ring, Piston, Comp., Center, .030" O.S. 295851 Ring, Piston, Oil, .030" O.S. (with expander)
27	68546	Lock--Piston Pin
28	295840	Pin Assembly--Std.
	295841	Pin Assembly--

K&T Saw Shop 606-678-9623 or 606-561-4983

www.mymowerparts.com

		.005'' O.S.
29	295838	Rod Assembly--Conn.
30	220837	Dipper--Conn. Rod
31	220811	Lock-Connecting Rod Screw
32	92659	Screw-Connecting Rod
33	230385	Valve--Exhaust
Note:		260444 Valve-Exh. Used on Model 140200 Series type Nos. 0131, 0140, 9138, 504031, 505025; also used on Model 141200 Series type Nos. 0134, 0137, 0138, 504525, 504526, 504530, 504532, 504541, 504543, 504550.
34	230386	Valve-Intake
Note:		230385 Valve--Intake Used on Model 140200 Series type Nos. 0131, 0140, 9138, 504031, 505025; also used on Model 141200 Series type Nos. 0134, 0137, 0138, 504525, 504526, 504530, 504532, 504541, 504543, 504550.
35	65906	Spring--Intake Valve
36	65906	Spring-Exhaust Valve
Note:		26828 Spring--Exhaust VaIve Used on Model 140200 Series type Nos. 0131, 0140, 9138, 504031, 505025; also used on Model 141200 Series type Nos. 0134, 0137, 0138, 504525, 504526, 504530, 504532, 504541, 504543, 504550.
40	230477	Retainer-Valve Spring
Note:		292260 Rotocap-Exhaust Valve Used on Model 140200 Series type Nos. 0131, 0140, 9138, 504031, 505025; also used on Model 141200 Series type Nos. 0134, 0137, 0138, 504525, 504526, 504530, 504532, 504541, 504543, 504550.

K&T Saw Shop 606-678-9623 or 606-561-4983

www.mymowerparts.com

43	230476	Pin--Valve Spring Ret.
Note:		
		230570 Pin--Exhaust Valve Rotocap Retainer 230569 Retainer-Exhaust Valve Rotocap Used on Model 140200 Series type Nos. 0131, 0140, 9138, 504031, 505025; also used on Model 141200 Series type Nos. 0134, 0137, 0138 504525, 504526, 504530, 504532, 504541, 504550.
45	260125	Tappet--Valve
46	210728	Gear-Cam
51	†27355	Gasket-Carburetor To Spacer
52	†27828	Gasket-Spacer To Cylinder Mounting
53	93329	Screw-Sem
55	295272	Housing-Rewind Starter
56	295871	Pulley--Rewind Starter
57	294303	Spring--Rewind Starter
58	66564	Rope-Starter (63" Long)
Note:		
		lf longer rope is needed, order No. 66574 and cut to required length.
59	230228	Pin--Starter Grip
60	66728	Grip-Starter Rope
61	66918	Bumper--Starter Pulley
62	93254	Screw--Pulley Bumper Mounting Sem
63	260414	Spring--Ratchet
64	230543	Adapter-Ratchet Spring
65	93163	Screw-Rewind Starter Housing Mounting Sem
66	295684	Clutch Assembly-Rewind Starter
67	210400	Housing-Rewind Starter Clutch
68	63770	Ball--Clutch
69	66718	Washer-Starter Clutch, Thrust
70	296916	Ratchet--Rewind Starter Clutch
Note:		
		270045 Washer--Ratchet Sealing 260517 Spring-Ratchet Sealing Washer Used on Model.140200 Series type No. 9137.
71	221301	Washer-Retainer
72	26032	Ring-Clutch Retainer
73	220823	Screen-Rewind Starter
74	93042	Screw-Rotating Screen Mounting Sem

K&T Saw Shop 606-678-9623 or 606-561-4983

www.mymowerparts.com

75	220865	Washer-Spring
79	296179	Case Assembly-Gear
80	27884	Gasket-Gear Case to Crankcase Cover
81	220234	Lock-Gear Case Mounting Screw
82	92502	Screw-Cap
83	296052	Shaft Assembly-Drive
Note:		296298 Shaft Assy.-Drive Used on Model 140200 Series type No. 0148; also used on Model 141200 Series type No. 504531.
84	92617	Plug--Breather
85	91386	Screw-Gear Case Cover Mounting
86	296053	Cover Assembly--Gear Case
87	298423	Seal-Oil
88	27328	Gasket-Gear Case Cover
89	91488	Plug-Oil Drain
90	296968	Carburetor Assembly (Manual Choke)
Note:		297243 Carburetor Assy. (Mechanical Gov.-Manual Choke) Used on Model 140200 Series type Nos. 9024, 505030; also used on Model 141200 Series type Nos. 505530, 505531. 297314 Carburetor Assy. (Manual Choke) Used on Model 140200 Series type Nos. 0135, 0138, 0141, 0142, 0146, 0148, 504028; also used on Model 141200 Series type Nos. 0132, 0133, 504533, 504534, 504536, 504539, 540547, 540548. 297388 Carburetor Assy. (Mechanical Gov.-Manual Choke) Used on Model 140200 Series type Nos. 9126 9127, 9128, 9129, 9134, 9136, 9138; also used on Model 141200 Series type Nos. 9125, 9126, 9127, 9128, 9138, 505511, 505512, 505513, 505514, 505515, 505516, 505517, 505518, 505519, 505520, 505521, 505522,

K&T Saw Shop 606-678-9623 or 606-561-4983

www.mymowerparts.com

		505523, 505524, 505526, 505527, 505528. 297554 Carburetor Assy. (Choke-A-Matic) Used on Model 140200 Series type Nos. 0125, 0130, 0137, 0139, 504026; also used on Model 141200 Series type Nos. 0135, 504537, 504538, 504540, 504546. 298507 Carburetor Assy. (Manual Choke) Used on Model 140200 Series type No. 0132. 298621 Carburetor Assy. Used on Model 140200 Series type No. 0147. 298666 Carburetor Assy. Used on Model 140200 Series type No. 9137.
95	93385	Screw-Throttle Valve Mounting Sem
96	210957	Valve--Throttle
96A	211203	Valve--Throttle
97	297988	Shaft and Lever-Throttle
98	93392	Screw-Machine, Rd. Hd .-#5-40 x 1/2"
101	93043	Pin-Governor Shaft
114	66594	Gasket-Needle Valve
Note:		66604 Gasket-Needle Valve Used on Model 140200 Series type Nos. 9024, 505030; also used on Model 141200 Series type Nos. 505530, 505531.
116	65978	Packing-Needle Valve
117	230590	Nut-Needle Valve
118	23433	Valve-Needle
120	92290	Washer-Lock-No. 10 x 1/16'' x 3/64''
122	210596	Spacer-Intake Elbow
124	92636	Screw-Cap, Hex. Hd.-1/4-20 x 2"
147	230591	Seat-Needle Valve
148	22235	Washer-Needle Valve (2)
149	26336	Spring-Needle Valve
150	220105	Connector-Gov. Link
151	93350	Screw-Machine, Rd. Hd.-5-40 x 3/4"
152	260575	Spring-Speed and Throttle Adjustment
153	298031	Screw-Carb. Lever
154	92634	Screw-Machine, Rd. Hd.-5-40 x 5/8"
Note:		

K&T Saw Shop 606-678-9623 or 606-561-4983

www.mymowerparts.com

		93350 Screw-Machine, Rd. Hd.-5-40 x 3/4" Used on Model 140200 Series type No. 0147.
155	220107	Carn-Speed Adjuster
156	220949	Lever-Speed Adjuster
Note:		
		220678 Lever-Speed Adjuster Used on Model 140200 Series type No. 0147.
163	†27660	Gasket-Air Cleaner Mounting
169	90832	Washer--Lock, 1/4" x 3/32" x 5/64"
171	92129	Nut--Hex.--1/4-28
180	296789	Tank Assembly-Fuel (3 quart)
181	293270	Cap-Fuel Tank
Note:		
		297863 Cap--Fuel Tank Used on Model 140200 Series type No. 9137.
182	221367	Bracket--FuelTa n k Support
188	92272	Screw--Cap, Hex. Hd.--5/16"-18 x 3/4"
189	90366	Washer--Lock, 5/16'' x 1/8'' x 1/16''
190	93341	Screw-Fuel Tank Mtg.
191	†27911	Gasket-Fuel Tank Mtg.
192	91397	Nut--Hex.--5/16''-18
200	295844	Blade-Air Vane Governor
Note:		
		221148 Guide-Air (Mechanical Gov.) Used on type Nos. 9000 to 9139 and all 505500 Series type nos.)
201	298091	Link--Air Vane Governor (Used on type Nos. 0110 to 0150 and all 504500 Series type nos.)
Note:		
		260555 Link--Mechanical Gov. (Used on type Nos. 9000 to 9139 and all 505500 Series type nos.)
202	260563	Link--Throttle (Used on type Nos. 9000 to 9139 and all 505500 Series type nos.)
203	296791	Crank--Bell (Used on type Nos. 9000 to 9139 and all 505500 Series type nos.)
Note:		

K&T Saw Shop 606-678-9623 or 606-561-4983

www.mymowerparts.com

297069 Crank-Bell
221425 Arm--Throttle Control
221427 Washer
260546 Spring--Control Arm Return
260575 Spring--Control Arm
221384 Bracket-Return Spring
93149 Screw--Control Arm
Used on Model 140200 Series type Nos. 9024, 505030; also used on Model 141200 Series type Nos. 505530, 505531.
221390 Crank--Bell
Used on Model 140200 Series type No. 0132.
221764 Crank-Bell
Used on Carburetor between Square Control Rod and Link and Speed Control Rod and Governor Lever on Model 140200 Series type No. 9137.

204	230117	Collar
205	230671	Screw--Bell Crank Mtg.

Note:

92265 Screw--Self Tapping
220982 Washer-Bell Crank

Used on Model 140200 Series type No. 9137.
93342 Screw-Self Tapping
230450 Collar--Bell Crank
Used on Model 140200 Series type No. 0132.

206	230533	Nut--Governor Control Rod (Used on type Nos. 0110 to 0150 and all 504500 Series type nos.)

Note:

230149 Nut--Governor Control Rod (Used on type Nos. 9000 to 9139 and all 505500 Series type nos.)
230580 Guide--Stop
230253 Stop--Control Rod-7/8" long
93266 Fastener-Washer
Used on Model 140200 Series type No. 9137.

207	26855	Spring-Governor Control Rod

K&T Saw Shop 606-678-9623 or 606-561-4983

www.mymowerparts.com

208	230460	Rod--Air Vane Governor Control (Used on type Nos. 0110 to 0150 and all 504500 Series type nos.)
	Note:	230559 Rod-Mechanical Governor Control (Used on type Nos. 9000 to 9139 and all 505500 Series type nos.)
209	260587	Spring--Air Vane Governor (Used on type Nos. 0110 to 0150 and all 504500 Series type nos.)
	260546	Spring--Mechanical Governor (Used on type Nos. 9000 to 9139 and all 505500 Series type nos.)
216	260449	Link-Choke
217	260189	Spring-Choke Link
218	221198	Washer-Choke Link (3)
219	296688	Governor Housing and Gear Assembly
220	221361	Washer-Thrust
221	230177	Cup-Governor
222	221144	Bracket-Mechanical Governor
	Note:	298640 Bracket--Mechanical Governor Used on Model 140200 Series type No. 9137.
223	221145	Lever-Governor Control
	Note:	93458 Washer--Spring Used between Lever and Bushing on Model 140200 Series type No. 9137.
224	91841	Screw--Machine, Fill. Hd.--6-32 x 1/4"
225	230526	Shaft-Governor Lever
226	220381	Follower-Governor Crank
227	296087	Lever Assembly-Governor
228	93100	Screw--Governor Lever
229	220680	Washer-Thrust
230	22826	Washer-Spacer
231	93064	Screw-Governor Housing to Crankcase Cover Mounting Sem
232	260584	Spring-Governor Link (Used only on type Nos. 9000 to 9139 and all 505500 Series

K&T Saw Shop 606-678-9623 or 606-561-4983

www.mymowerparts.com

		type nos.)
256	220952	Lever-Speed Adjuster
257	93263	Screw-Machine, Fill. Hd.-#10-32 x 3/8"
258	93062	Screw-Sem
261	93105	Screw-Sem
264	90355	Nut-Hex.-10-32
265	221370	Clamp-Casing
267	92715	Screw-Sem
268	65616	Casing-Control Wire--72" long
	Note:	lf longer casing is required, specify length in inches; if shorter wire is needed, order No. 65616 and cut to required length .
269	26633	Wire-Control-78" long
	Note:	If longer wire is required, specify length in inches; if shorter wire is needed, order No. 26633 and cut to required length.
270	63426	Locknut-Control Wire Casing
271	290568	Lever Assembly-Control
272	290584	Base-Control Wire
273	290642	Lever-Control
274	91237	Washer-Lock-1/4" x 3/32" x 5/64"
275	92287	Screw-Machine, Rd. Hd.-10-32 x 1/4"
276	22834	Washer-Spacer
277	22368	Washer-Control Lever
278	22725	Washer-Control Lever
279	92306	Screw Cap, Hex. Hd.-1/4-28 x 5/8"
300	294599	Muffler-Exhaust
301	91245	Nipple-Exhaust
302	91242	Locknut-Muffler and Elbow
303	91246	Elbow--Muffler-45 degree
	Note:	91219 Elbow-Muffler-45 degree, Street Used on Model 141200 Series type Nos. 0133, 504536, 504540. 91464 Elbow-Muffler-90 degree, Street Used on Model 140200 Series type Nos. 0125 , 0130, 0137, 0138, 0139, 0147, 9137, 504028; also used on Model 141200 Series type Nos . 504026 ,504537,

K&T Saw Shop 606-678-9623 or 606-561-4983

www.mymowerparts.com

```
                    504538.
304       295389    Housing-Blower
     Note:  294605 Housing-
                    Blower
                    Used on Model 140200
                    Series type No. 9137;
                    also used on Model
                    141200 Series type
                    No. 9138.
                    296454 Housing-
                    Blower
                    When ordering this
                    blower housing, order
                    No. 297415 screw and
                    nut kit to remount the
                    belt guard.
                    Used on Model 140200
                    Series type Nos.
                    504014, 504019,
                    504024; also used on
                    Model 141200 Series
                    type Nos. 0114,
                    504514, 504519,
                    504524, 505514,
                    505519, 505524.
                    296470 Housing-
                    Blower
                    When ordering this
                    blower housing, order
                    No. 297415 screw and
                    . nut kit to remount
                    the
                    belt guard.
                    Used on Model 140200
                    Series type Nos.
                    504013, 504018,
                    504023; also used on
                    Model 141200 Series
                    type Nos. 504513,
                    504518, 504523,
                    505513, 505518,
                    505523.
                    297189 Housing-
                    Blower
                    Used on Model 140200
                    Series type Nos.
                    504012, 504017,
                    504022; also used on
                    Model 141200 Series
                    type Nos. 0112,
                    504512, 504517 ,

                    504522, 505512,
                    505517, 505522.
305        93158    Screw-Blower
                    Housing, Guard and
                    Tank Bracket to Sup-
                    port Bracket Mtg. Sem
     Note:
                    93294 Screw-Blower
                    Housing Mounting Sem
                    (At Bottom)
                    62199 Washer-Plain
                    Used on Model 141200
                    Series type No.
                    505523.
306       221005    Shield-Cylinder
```

K&T Saw Shop 606-678-9623 or 606-561-4983

www.mymowerparts.com

307	93163	Screw-Cylinder Shield Mounting Sem
308	220824	Cover-Cylinder Head
309	296122	Motor-Electric Starter (12 volt) (Electric Auto-Lite No. Med. 4001) For Service on these motors see your near-est "Authorized Auto-Lite Service Station."
310	93268	Bolt-Case
317	296013	Bracket-Starter
320	297162	Pulley-ldler
321	210961	Pulley-Electric Starter
321A	210899	Pulley-Vee Belt
322	90931	Screw-Cap, Hex. Hd.-1/4-20 x 2-I/4"
323	67318	Belt-Vee
323A	66828	Belt-Vee
324	221067	Screen-Electric Starter
325	22809	Pulley-Rope Starter
326	90681	Screw-Cap, Hex. Hd.-5/16-18 x 5.8"
327	91388	Washer-Lock, 5/16 x 3/32 x 5/64"
328	221122	Guard-Belt
328A	221447	Guard-Belt
329	93246	Screw-Belt Guard Mounting Sem
330	29878	Rope-Starter
332	92284	Nut
333	296834	Armature Assembly
334	93381	Screw-Armature Mounting Sem
335	93381	Screw-Armature Mounting Sem (with 2 washers)
336	296827	Cable-Ignition (Used before Serial No. 38769. Cables used after this serial number are integral with the ignition coil.)
337	29693	Plug-Spark
Note:		293918 Plug-Spark Used on Model 140200 Series type Nos. 9134, 9136, 9138, 505025, 505031, 505032; also used on Model 141200 Series type Nos. 9138, 505527, 505528, 505532.
338	29806	Gasket-Spark Plug
339	29667	Breaker Assembly--Ignition
340	26018	Spring-Breaker Arm
342	65704	Plunger-Breaker Point
343	29861	Condenser
344	93370	Screw-Condenser

K&T Saw Shop 606-678-9623 or 606-561-4983

		Mounting Sem
345	221046	Cover-Breaker Point
346	93014	Screw-Breaker Point Cover Mounting Sem
347	221808	Switch--Stop
Note:		297472 Switch-Stop Used on Mech. Gover-nor Bracket on Model 140200 Series type No. 9137.
348	296110	Plate Assembly-Stop Switch Insulator
353	92791	Washer-Lock-Shakeproof
354	90576	Nut-Hex.-8-32
356	295413	Wire-Ground
357	91540	Key-Pulley
358	295970	Gasket Set
362	291630	Shield-Spark Plug (with stop switch)
Note:		66538 Elbow-Spark Plug Used on Model 140200 Series type No. 9137; also used on Model 141200 Series type No. 505531.
363	19165	Puller-Flywheel (optional accessory)
370	66432	Washer-Plain
380	62199	Washer-Plain
381	91419	Screw-Cap, Hex. Hd.-1/4-20 x 5/8"
382	92666	Screw-Cap, Hex. Hd.-1/4-20 x 1/2"
383	89838	Wrench-Spark Plug
392	260455	Spring-Fuel Pump Diaphragm
394	270026	Diaphragm
411	93448	Plug-Oil Level Hole
413	230581	Nut-Starter Mounting
432	221377	Cap-Spring
433	93265	Pin-Diaphragm Cover
434	210959	Cover-Diaphragm
435	93141	Screw-Diaphragm Cover
454	296178	Housing-Fuel Pipe Screen (For 3/16" O.D. Brass Pipe)
	296191	Housing-Fuel Pipe Screen (For 1/8" O.D. Brass Pipe)
474	296436	Armature-FlywheeI Generator
475	296562	Rectifier
477	67538	Sleeving-Wire
478	296367	Plate-Generator Mtg.
480	93163	Screw-Support Plate and Bracket Mtg. Sem
481	230582	Spacer-Armature Mtg.
482	93234	Screw-Armature Mounting Sem

483	296266	Capacitor (Condenser)
484	93166	Screw-Self Tapping, Hex. Hd., Sem
485	296437	Post Assy. --Fuse
486	67135	Fuse-3AG-1-1/2 Amp.
487	296347	Cap-Fuse Holder
488	296579	Block Assy.-Fuse
489	93237	Screw-Fuse Block Mounting Sem
490	67125	Fuse-3AG-7-1/2 Amp.
491	221241	Support-Charger Mtg.
492	296028	Starter-Generator (12 volt) (Delco-Remy No. 1101968 and Pulley-Delco-Remy No. 1949358)
	Note:	For service on the Starter-Generator, see your nearest "Authorized Delco-Remy Service Station of United Motors."
493	211112	Bracket-Lower Starter
497	91203	Screw-Cap, Hex. Hd .-5/16-18 x 1"
500	91325	Washer-Plain
501	295924	Regulator-Voltage (Delco-Remy No. 1118988).
503	221205	Strap-Starter (long)
504	221206	Strap-Starter (short)
505	92278	Nut-Hex.-1/4-20
506	90072	Screw--Machine, Rd. Hd.-8-32 x 5/8"
507	66895	Insulator
508	93294	Screw-Blower Hsg. Mounting Sem
512	296560	Armature and Wiring Assembly
513	296567	Clutch Assembly-Electric Starter
514	91700	Nut-Hex.-1/4-20
517	295423	Pulley-Rope Starter
518	69932	Rope-Starter
523	295940	Cap Assembly-Oil Filler
524	65304	Gasket-Oil Filler Cap
525	230553	Pipe-Oil Filler
527	221428	Clamp-Breather Tube
528	230670	Tube-Breather
529	66928	Grommet-Breather Tube
534	93322	Screw-Air Cleaner
535	27987	Element-Air Cleaner
	Note:	294861 Cover and Filter-Air Cleaner Used on Model 140200 Series type No. 0143. Uses: 27795 Gasket (Internal)
536	297036	Cleaner Assy.-Air
	Note:	294870 Cleaner Assy.-

www.mymowerparts.com

		Air (Includes Mtg. Stud) Used on Model 140200 Series type No. 0143. 297778 Cover-- Carburetor (Includes Mtg. Stud) Used on Model 140200 Series type No. 9137.
538	260560	Rod--Speed Control
Note:		
		260683 Rod-Speed Control 260684 Link-Speed Control Used between rod and speed adjuster lever on Model 140200 Series type Nos. 0135, 0148, 504025. 260683 Rod-Speed Control 260864 Link-Speed Control Used between Square Rod and Bell Crank on Carburetor . 260845 Link-Speed Control Used between Bell Crank and Governor Lever on Model 140200 Series type No. 9137.
539	221372	Clip-Speed Control
Note:		
		66432 Washer 26157 Spring Used on Model 140200 Series type Nos. 0135, 0148, 504025. 221766 Cap-Friction Spring 260847 Spring-Friction Used on Model 140200 Series type No. 9137.
540	221380	Lever-Speed Adjuster
541	22398	Washer-Speed Adjuster Lever to Carburetor
542	91494	Screw-Clip Mtg.
Note:		
		91359 Screw-Machine, Fill. Hd.- 10-32 x 3/4" Used on Model 140200 Series type Nos. 0135, 0148, 504025. 92484 Screw-Machine, Fil. Hd.-10-32 x 1/2" Used on Model 140200 Series type No. 9137.
590	93226	Screw-Breaker Mtg.
605	297170	Bracket-Guard
606	221445	Strap-Adjusting
607	93338	Screw-Sem (Bracket to Cylinder)
608	295001	Starter Assembly- Rewind

K&T Saw Shop 606-678-9623 or 606-561-4983

www.mymowerparts.com

609	260564	Spring-Throttle Link
612	296811	Pipe-Fuel (Plastic)
634	270167	Washer-Throttle Shaft (Felt)
655	221014	Anchor-Spring
656	260672	Spring-Idler Arm
681	299060	Needle Valve Kit

*Trademark of Briggs & Stratton Corp.

†Included in Gasket Set-Part No. 295970.

K&T Saw Shop 606-678-9623 or 606-561-4983