For Arctic Cat Discount Parts Call 606-678-9623 or 606-561-4983

ACCELERATOR ASSEMBLY

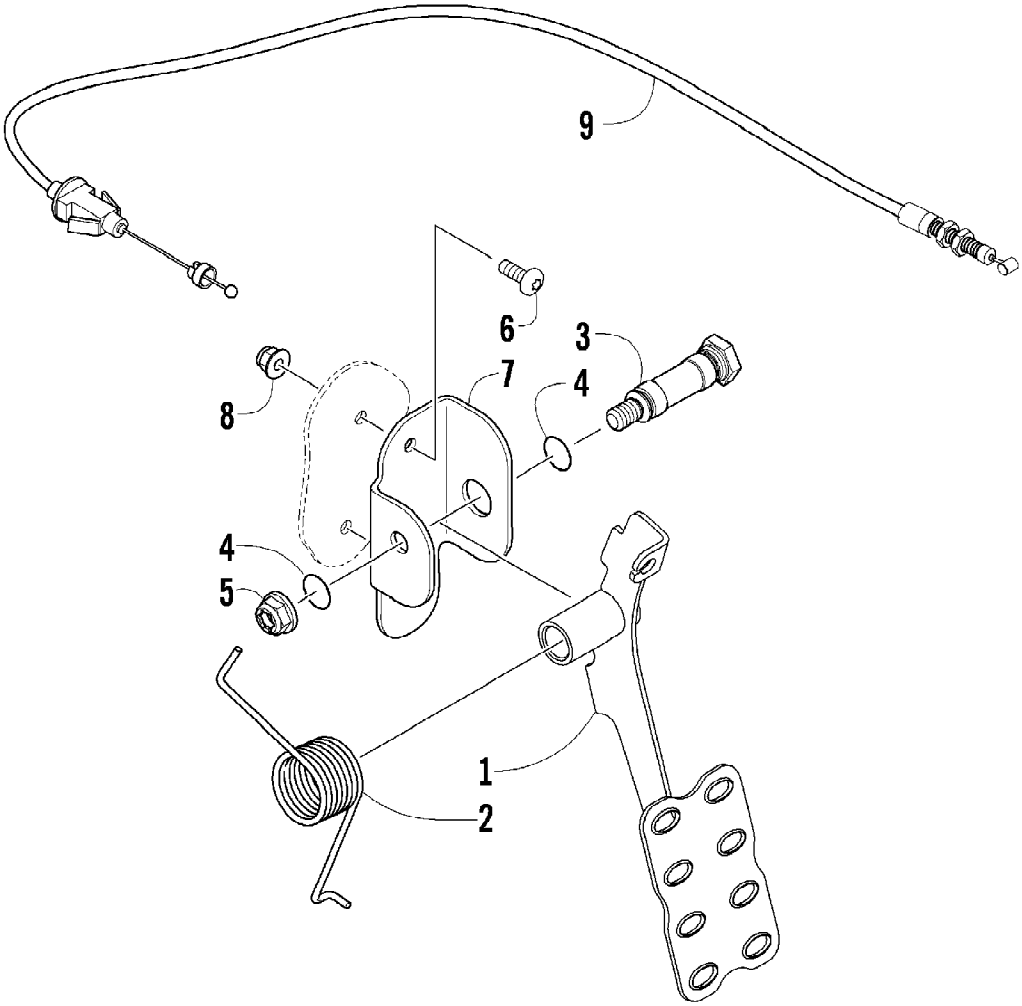

www.mymowerparts.com

For Arctic Cat Discount Parts Call 606-678-9623 or 606-561-4983

ACCELERATOR ASSEMBLY

Ref #	Part Number	Qty	S/P/F	Description
1	1502-590	1		Pedal, Accelerator
2	0405-233	1		Spring
3	0402-872	1		Axle
4	1602-213	2	/P	O-Ring
5	8422-002	1		Nut, Lock
6	8477-616	2		Screw, Machine
7	0502-991	1		Bracket, Accelerator Pedal
8	8427-602	2		Nut, Lock
9	0487-066	1		Cable, Accelerator

www.mymowerparts.com

For Arctic Cat Discount Parts Call 606-678-9623 or 606-561-4983

AIR INTAKE ASSEMBLY

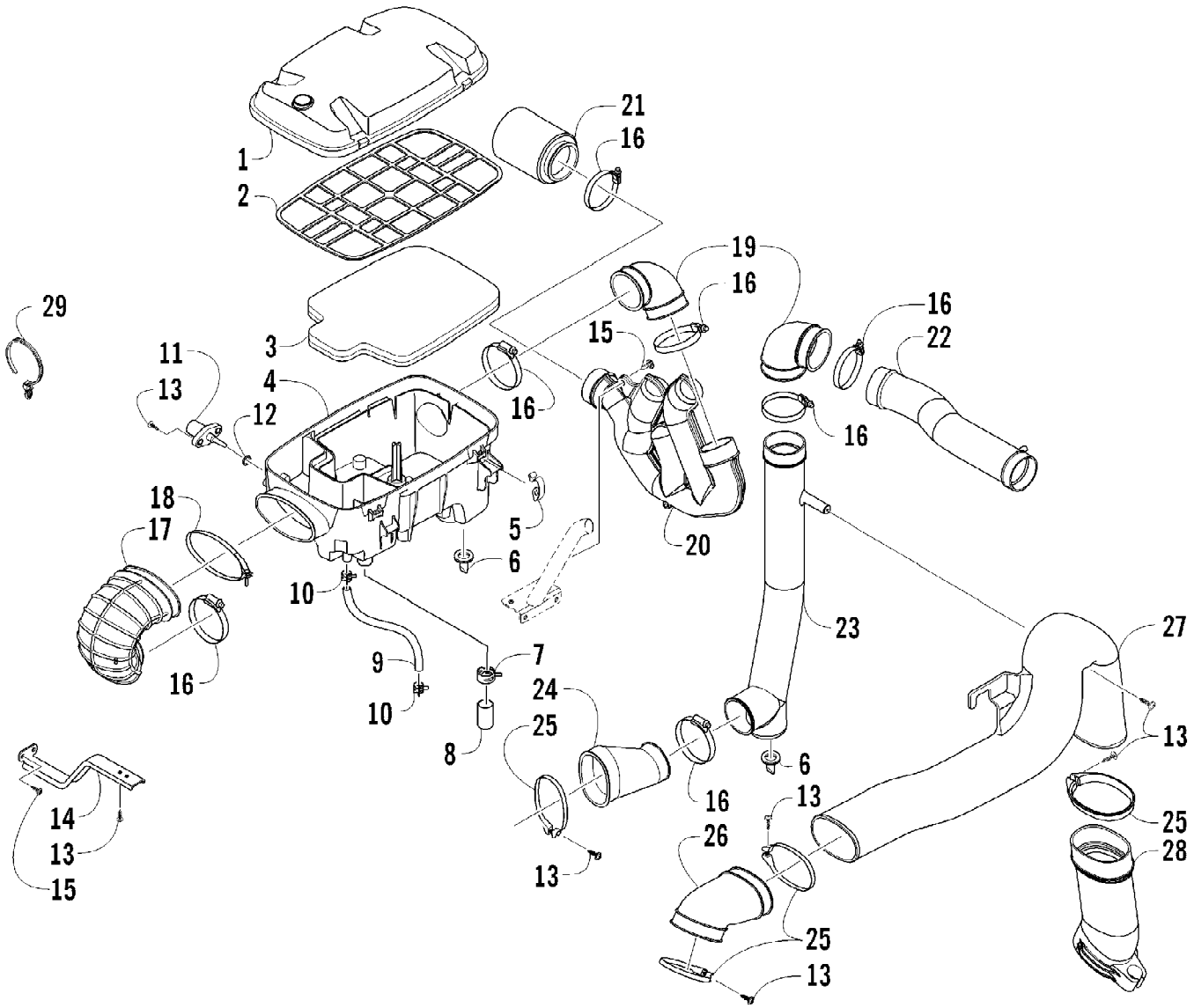

www.mymowerparts.com

For Arctic Cat Discount Parts Call 606-678-9623 or 606-561-4983

AIR INTAKE ASSEMBLY

Ref #	Part Number	Qty	S/P/F	Description
1	0470-877	1	/P	Cover, Air Intake
2	0470-560	1		Screen, Air Filter
3	0470-558	1		Filter, Air
4	0470-728	1		Housing, Air Intake
5	0423-455	4		Clip, Spring
6	0470-442	AR	/P	Valve, Drain
7	1623-287	1		Clamp, Hose
8	0423-766	1		Cap, Drain
9	0410-172	1	/P	Hose, Vent - Crankcase
10	0423-045	2		Clamp, Hose
11	0430-055	1		Sensor, Air Temperature (inc. 12)
12	5507-224	1		O-Ring
13	0423-342	9	/P	Screw, Self-Tapping
14	2506-651	1		Bracket, Support
15	0623-784	3		Screw, Self-Tapping
16	0423-019	7		Clamp
17	0470-511	1		Boot, Intake
18	0423-554	1		Clamp
19	0413-098	2		Boot, Air-In
20	0513-028	1		Duct, Air-In
21	0470-834	1		Filter, Intake
22	0413-219	1		Duct, Intake
23	0413-218	1		Duct, Intake - Lower
24	0413-049	1		Boot, Duct
25	0423-550	4		Clamp
26	0413-109	1		Boot, Air-Out - Clutch
27	0413-220	1		Duct, Air-Out - Clutch
28	0413-226	1		Duct, Air-Out - Lower
29	0423-075	AR		Tie, Cable - Push-Mount

www.mymowerparts.com

For Arctic Cat Discount Parts Call 606-678-9623 or 606-561-4983

BATTERY AND STARTER MOTOR ASSEMBLY

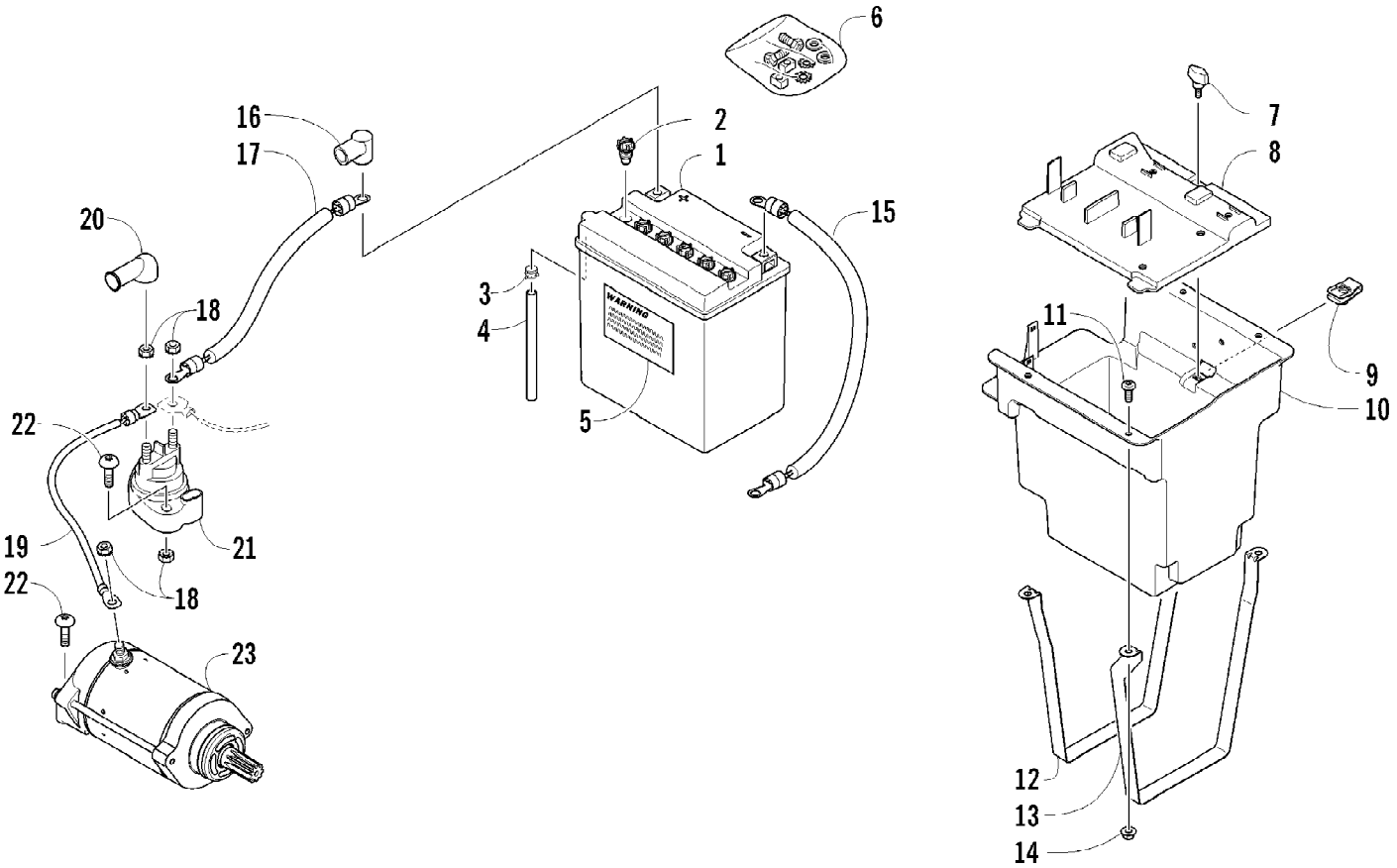

www.mymowerparts.com

For Arctic Cat Discount Parts Call 606-678-9623 or 606-561-4983

BATTERY AND STARTER MOTOR ASSEMBLY

Ref #	Part Number	Qty	S/P/F	Description
1	0445-081	1		Battery (inc. 2-6)
2	0645-588	6	/P	Cap, Battery
3	0645-152	1		Clamp, Hose
4	0645-262	1		Hose, Vent
5	0645-430	2		Decal, Warning
6	0445-082	1		Kit, Hardware
7	1441-624	1		Screw, Thumb
8	2406-947	1		Cover, Battery Box
9	0423-577	1		Clip, U-Nut
10	2406-914	1		Box, Battery
11	8476-616	4		Screw, Machine
12	0470-854	1		Hold-Down, Battery Box - Right
13	0470-855	1		Hold-Down, Battery Box - Left
14	8424-602	4	/P	Nut
15	0445-050	1		Cable, Battery/Ground
16	0645-019	2		Boot, Terminal
17	0445-049	1		Cable, Battery/Solenoid
18	0623-038	5		Nut w/Washer
19	0445-061	1		Cable, Solenoid/Starter
20	0645-327	1		Boot, Terminal - Solenoid
21	0445-058	1	/P	Solenoid
22	8476-625	4		Screw, Machine
23	0825-013	1	/P	Motor, Starter - Assembly

www.mymowerparts.com

For Arctic Cat Discount Parts Call 606-678-9623 or 606-561-4983

CAM CHAIN ASSEMBLY

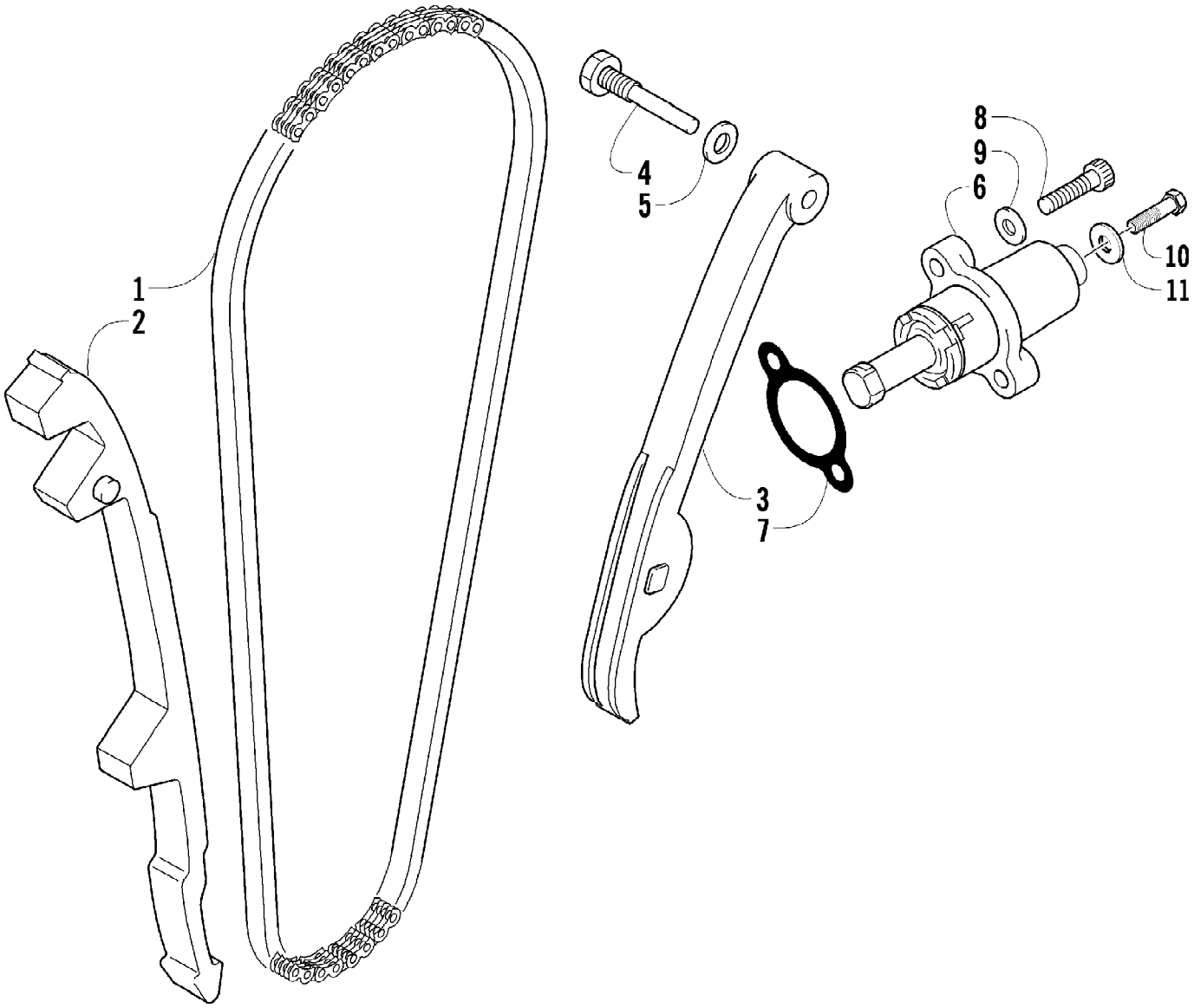

www.mymowerparts.com

For Arctic Cat Discount Parts Call 606-678-9623 or 606-561-4983

CAM CHAIN ASSEMBLY

Ref #	Part Number	Qty	S/P/F	Description
1	0810-001	1		Chain, Cam
2	0810-002	1		Guide, Chain
3	0810-003	1		Tensioner, Chain
4	0826-036	1		Pivot, Tensioner
5	0830-025	1		Washer, Crush
6	0810-004	1		Adjuster, Tensioner - Assembly
7	0830-018	1		Gasket
8	8468-625	2		Screw, Machine
9	0830-107	2		Gasket
10	8400-610	1		Screw, Cap
11	0828-129	1		Washer

www.mymowerparts.com

For Arctic Cat Discount Parts Call 606-678-9623 or 606-561-4983

CARGO BOX AND TAILGATE ASSEMBLY

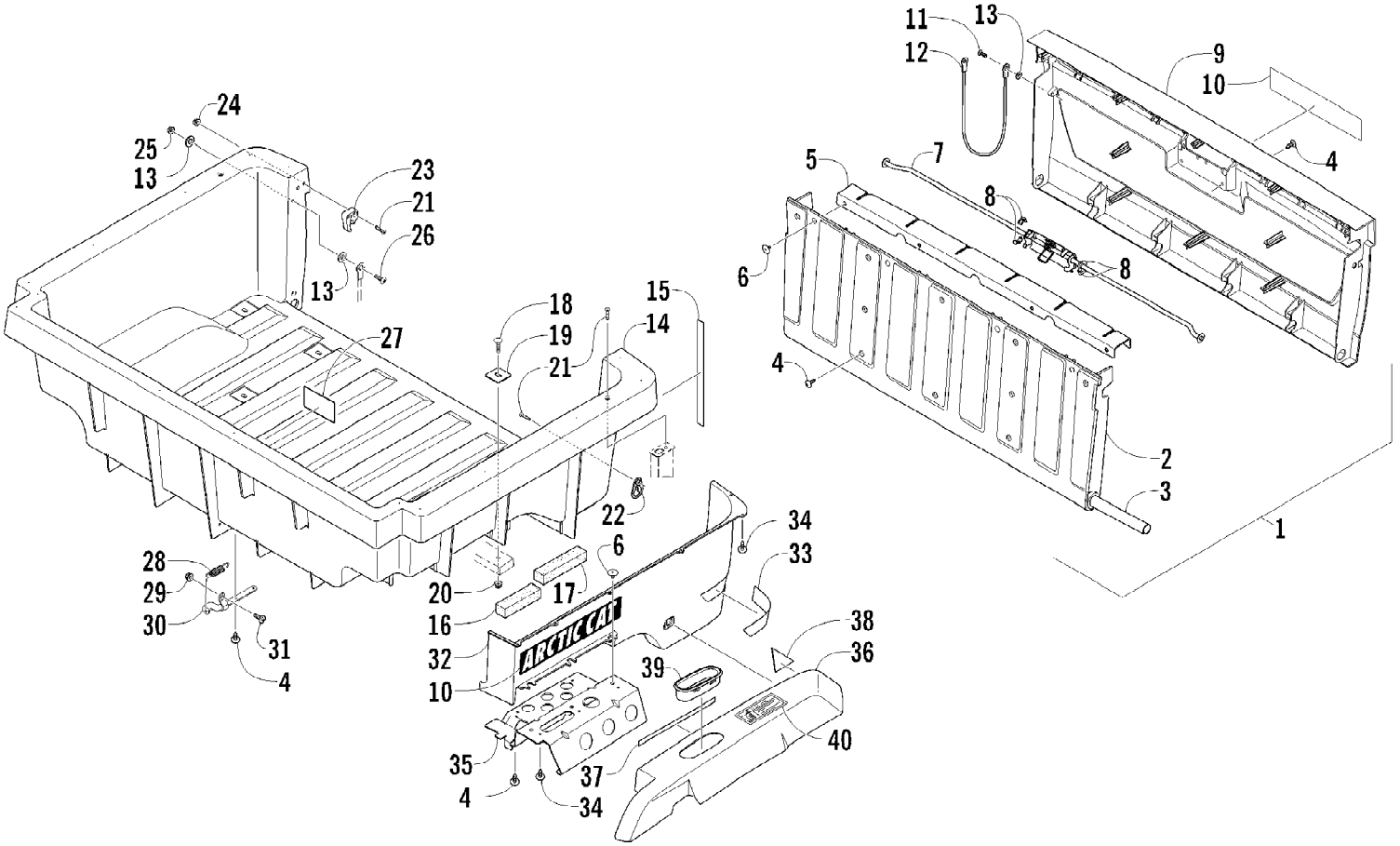

www.mymowerparts.com

For Arctic Cat Discount Parts Call 606-678-9623 or 606-561-4983

CARGO BOX AND TAILGATE ASSEMBLY

Ref #	Part Number	Qty	S/P/F	Description
1	2506-205	1	/P	Tailgate Assembly (inc. 2-9)
2	2406-365	1	/P	Panel, Tailgate - Inner
3	1406-927	1		Shaft, Pivot - Tailgate
4	0623-784	20		Screw, Self-Tapping
5	1506-704	1		Brace, Tailgate
6	0423-101	10		Screw, Shoulder
7	2506-056	1		Latch, Tailgate - Assembly
8	1406-706	4		Bushing
9	2406-369	1	/P	Panel, Tailgate - Outer
10	1411-539	3		Decal, Box - "Arctic Cat"
11	8476-625	2		Screw, Machine
12	0487-045	2		Cable, Tailgate
13	8050-217	6	/P	Washer
14	2406-916	1	/P	Box, Cargo
15	0417-006	2		Strip, Foam
16	0417-011	2		Foam, Cargo Box
17	0417-010	2		Foam, Cargo Box
18	0423-623	8		Bolt, Carriage
19	1506-933	8		Plate, Retainer
20	8424-802	8		Nut
21	8474-630	8		Screw, Machine
22	1506-539	1		Bracket, Tailgate
23	2506-664	1		Striker, Tailgate - Right
23	2506-665	1	/P	Striker, Tailgate - Left
24	8424-602	4	/P	Nut
25	0624-250	2		Nut, Lock
26	8476-620	2		Screw, Machine
27	1411-119	1		Decal, Warning - Cargo
28	2416-086	1		Spring
29	0423-540	1		Nut, Lock
30	2516-178	1	/P	Bracket, Cargo Box Latch
31	8476-616	1		Screw, Machine
32	1406-762	1	/P	Panel, Box - Right
32	1406-761	1	/P	Panel, Box - Left
33	1411-128	1		Decal, Reflector - Right
33	1411-129	1		Decal, Reflector - Left
34	0423-342	28	/P	Screw, Self-Tapping
35	1506-776	1		Bracket, Fender Support - Right
35	2506-927	1		Bracket, Fender Support - Left
36	2506-992	1		Fender, Rear - Assembly - Upper Right (inc. 37-38)
36	2506-993	1		Fender, Rear - Assembly - Upper Left (inc. 37-39)
37	0417-007	2		Strip, Foam
38	0417-008	2		Pad, Foam
39	2516-037	1		Ring, Trim
40	1411-120	2		Decal, Warning - Pinch Point

www.mymowerparts.com

For Arctic Cat Discount Parts Call 606-678-9623 or 606-561-4983

CLUTCH/V-BELT/MAGNETO COVER ASSEMBLY

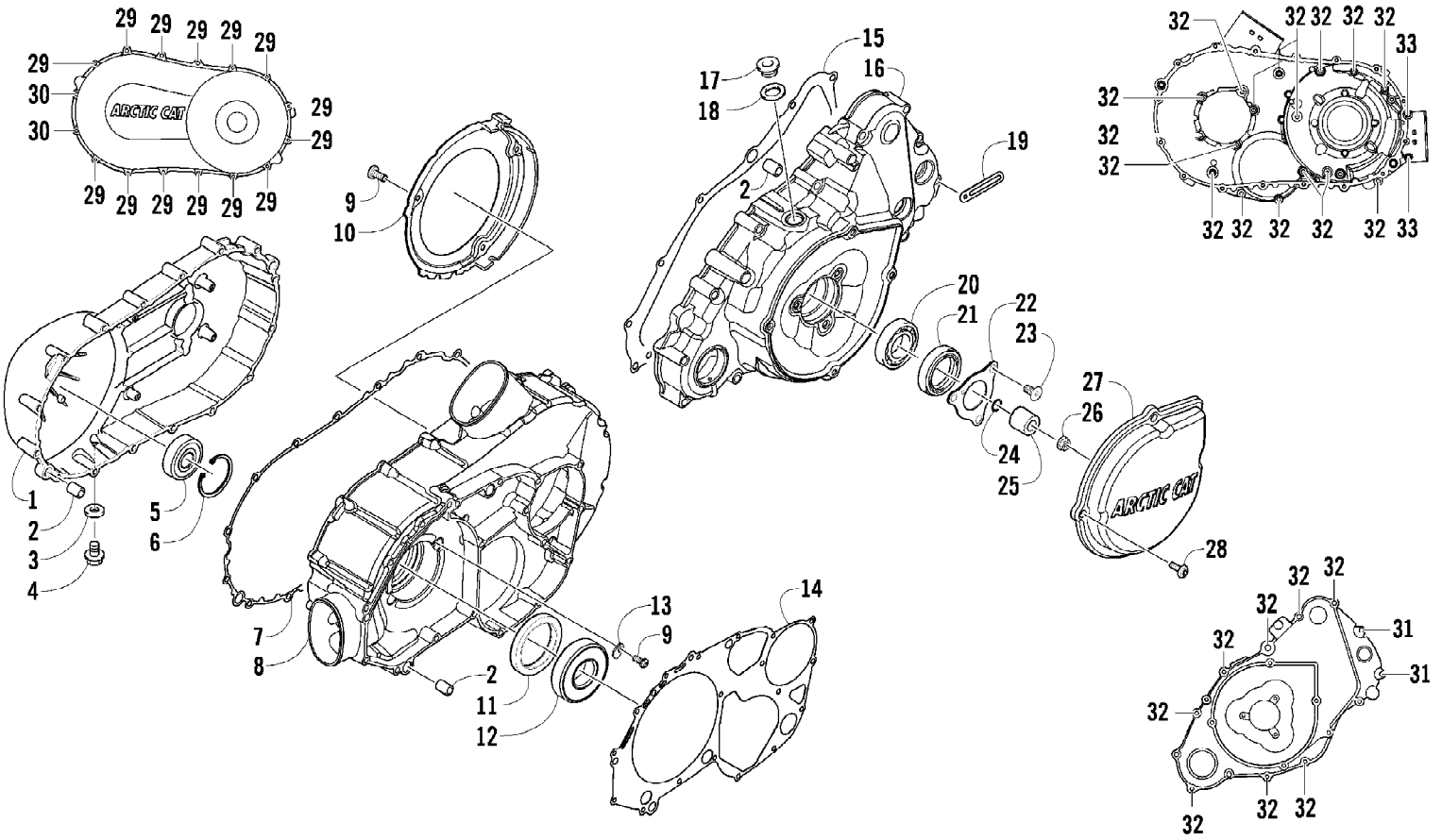

www.mymowerparts.com

For Arctic Cat Discount Parts Call 606-678-9623 or 606-561-4983

CLUTCH/V-BELT/MAGNETO COVER ASSEMBLY

Ref #	Part Number	Qty	S/P/F	Description
1	0806-088	1	/P	Cover, V-Belt
2	0829-002	6		Pin, Dowel
3	0830-013	1		Washer, Crush
4	8408-812	1		Screw, Cap
5	0832-060	1		Bearing
6	0831-078	1		Ring, Retaining
7	0830-174	1	/P	Gasket, V-Belt Cover
8	0806-091	1		Cover, Clutch
9	0826-029	5		Screw, Machine
10	0806-048	1		Plate, Air Intake
11	0830-188	1	/P	Seal
12	0832-047	1	S	Bearing
13	0822-010	2	/P	Retainer, Bearing
14	0830-116	1	/P	Gasket, Clutch Cover
15	0830-128	1		Gasket, Magneto Cover
16	0806-082	1	/P	Cover, Magneto - Assembly
17	0826-155	1		Plug
18	0830-015	1		Washer, Crush
19	3002-964	1	/P	Clamp, Wire
20	0832-045	1	S	Bearing
21	0830-158	1		Seal
22	0805-008	1		Retainer, Seal
23	0826-031	3		Screw, Machine
24	0830-108	1		O-Ring
25	0820-061	1		Bushing
26	0827-008	1		Nut
27	0820-062	1		Cover, Magneto
28	8468-616	4		Screw, Machine
29	8468-645	14		Screw, Machine
30	8468-655	2		Screw, Machine
31	8468-625	2		Screw, Machine
32	8468-640	24		Screw, Machine
33	8468-675	2		Screw, Machine

www.mymowerparts.com

For Arctic Cat Discount Parts Call 606-678-9623 or 606-561-4983

CONSOLE AND FLOOR PANEL ASSEMBLY

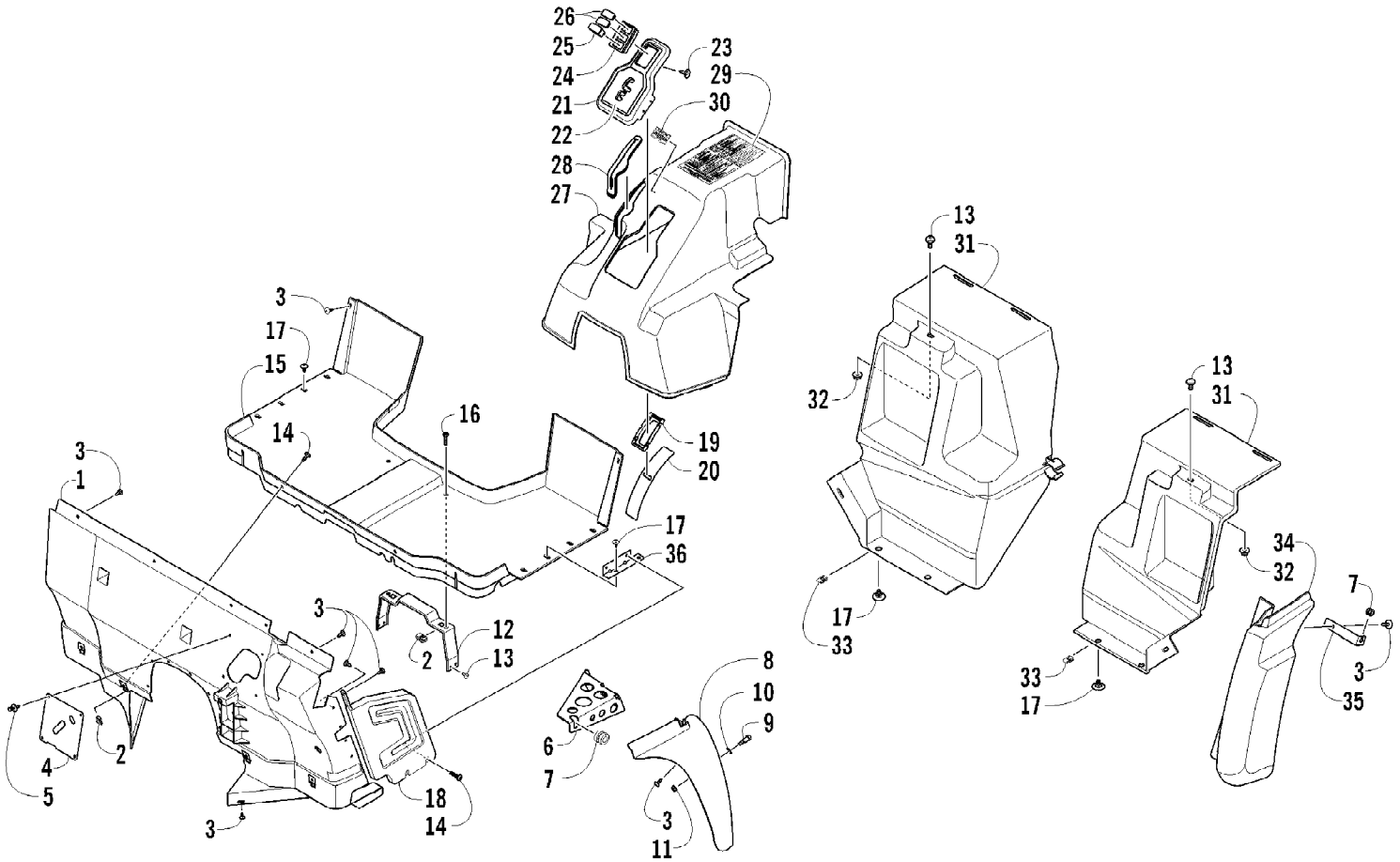

www.mymowerparts.com

For Arctic Cat Discount Parts Call 606-678-9623 or 606-561-4983

CONSOLE AND FLOOR PANEL ASSEMBLY

Ref #	Part Number	Qty	S/P/F	Description
1	2516-939	1		Panel, Fender - Inner
2	0423-577	8		Clip, U-Nut
3	0623-784	28		Screw, Self-Tapping
4	2406-635	1		Panel, Splash - Inner Fender
5	0623-362	4		Rivet, Reinstallable
6	2506-066	1		Bracket, Support - Right
6	2506-067	1		Bracket, Support - Left
7	0423-447	4		Grommet
8	1406-730	1		Fender, Front - Right
8	1406-731	1		Fender, Front - Left
9	0623-855	2		Screw, Shoulder
10	8050-217	2	/P	Washer
11	8048-366	2		Nut, Lock
12	2516-313	1		Bracket, Support
13	8476-616	6		Screw, Machine
14	8468-625	8		Screw, Machine
15	2416-085	1		Floor
16	8468-670	2		Screw, Machine
17	0423-545	12	/P	Screw, Shoulder
18	2416-641	2		Panel, Side
19	1402-793	1		Slide, Shift Gate
20	1402-794	1		Slide, Shift
21	1502-520	1		Gate, Shift (inc. 22)
22	1411-985	1		Decal, Shift Gate
23	0423-342	3	/P	Screw, Self-Tapping
24	0409-069	1		Panel, Switch-Mount
25	0409-071	1		Switch, Reverse Override
26	0409-070	2		Plug, Switch-Hole
27	2406-952	1		Console, Center
28	2406-960	1		Boot, Parking Brake Lever
29	2411-511	1		Decal, Warning - Console
30	2411-094	1		Decal, Brake Lever
31	2416-270	1		Panel, Splash - Right
31	2416-271	1		Panel, Splash - Left
32	8424-602	2	/P	Nut
33	0423-466	4		Clip, U-Nut
34	2406-870	1		Fender, Rear - Lower - Right
34	2406-871	1		Fender, Rear - Lower - Left
35	2516-326	2		Bracket, Fender Support - Lower
36	4506-260	1		Bracket, Side Panel - Right
36	4506-261	1		Bracket, Side Panel - Left

www.mymowerparts.com

For Arctic Cat Discount Parts Call 606-678-9623 or 606-561-4983

COOLING ASSEMBLY

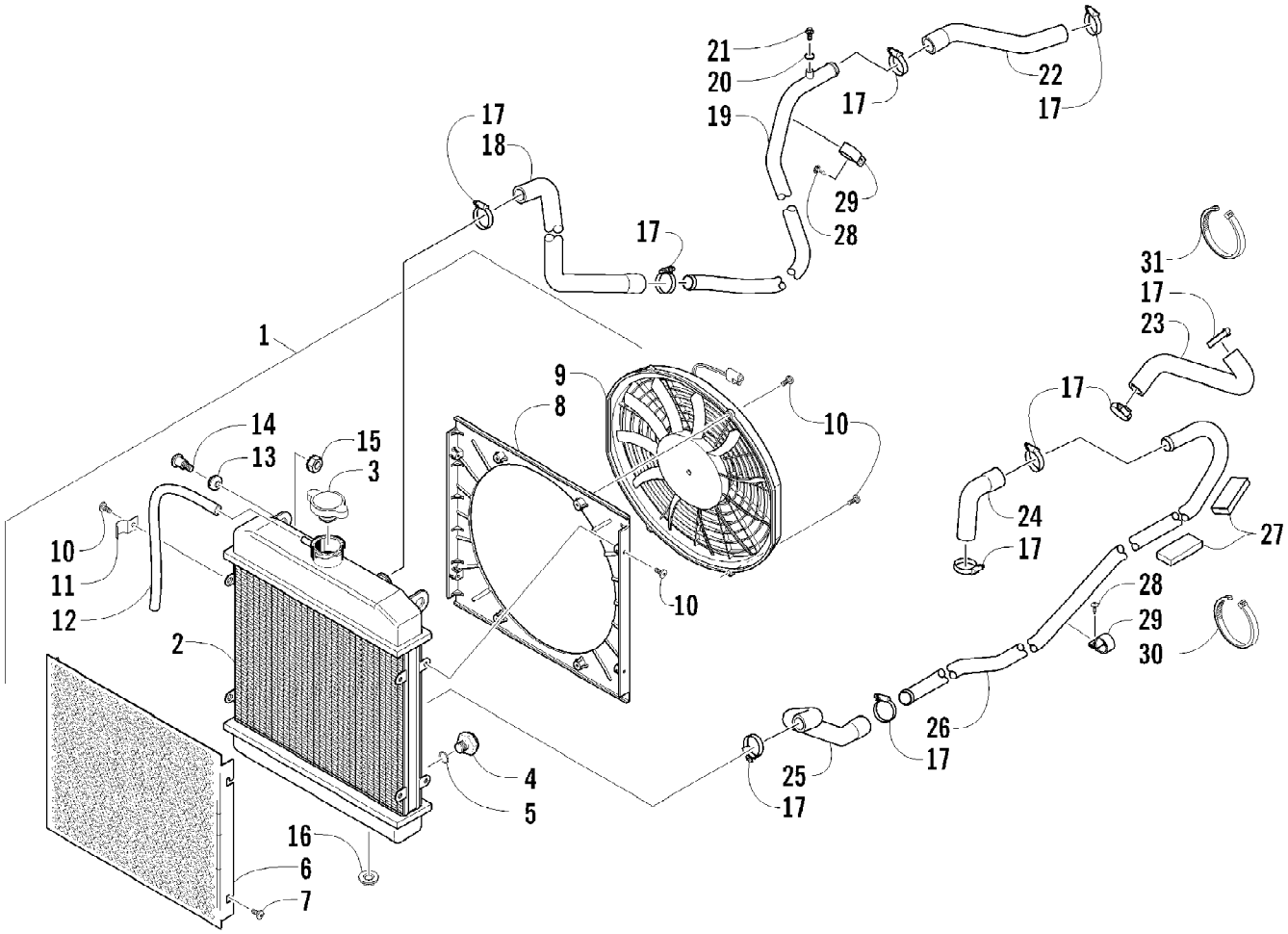

www.mymowerparts.com

For Arctic Cat Discount Parts Call 606-678-9623 or 606-561-4983

COOLING ASSEMBLY

Ref #	Part Number	Qty	S/P/F	Description
1	0413-256	1	/P	Radiator - Assembly (inc. 2-13)
2	0413-205	1		Radiator
3	0413-255	1	/P	Cap, Radiator
4	0413-195	1		Plug, Drain
5	1602-213	1	/P	O-Ring
6	0413-007	1		Screen, Radiator
7	8475-512	4		Screw, Machine
8	0413-203	1		Shroud, Fan
9	0413-123	1	/P	Fan, Cooling
10	0623-378	8		Screw, Self-Tapping
11	0423-351	1		Clamp, Wire
12	0610-016	AR	/P	Hose - 25 ft
12	0610-015	AR	/P	Hose - 100 ft
13	0423-030	2		Grommet
14	0423-484	2		Screw, Shoulder
15	0623-038	2		Nut w/Washer
16	0423-028	2		Bushing, Stem
17	0423-496	10		Clamp, Hose
18	0410-092	1		Hose, Coolant - Upper Radiator
19	0510-594	1		Pipe, Coolant - Upper
20	0423-921	1		O-Ring
21	0423-984	1	S	Screw, Bleed
22	0410-207	1		Hose, Coolant - Upper Engine
23	0410-095	1		Hose, Coolant - Rear
24	0410-093	1		Hose, Coolant - Lower Engine
25	0410-094	1		Hose, Coolant - Lower Radiator
26	0410-090	1		Pipe, Coolant - Lower
27	0406-288	2		Pad
28	0623-784	2		Screw, Self-Tapping
29	0423-594	2		Clamp, Routing
30	0123-903	AR		Cable Tie - 11.5 in.
31	0623-751	AR		Tie, Cable - Reusable

www.mymowerparts.com

For Arctic Cat Discount Parts Call 606-678-9623 or 606-561-4983

CRANK BALANCER ASSEMBLY

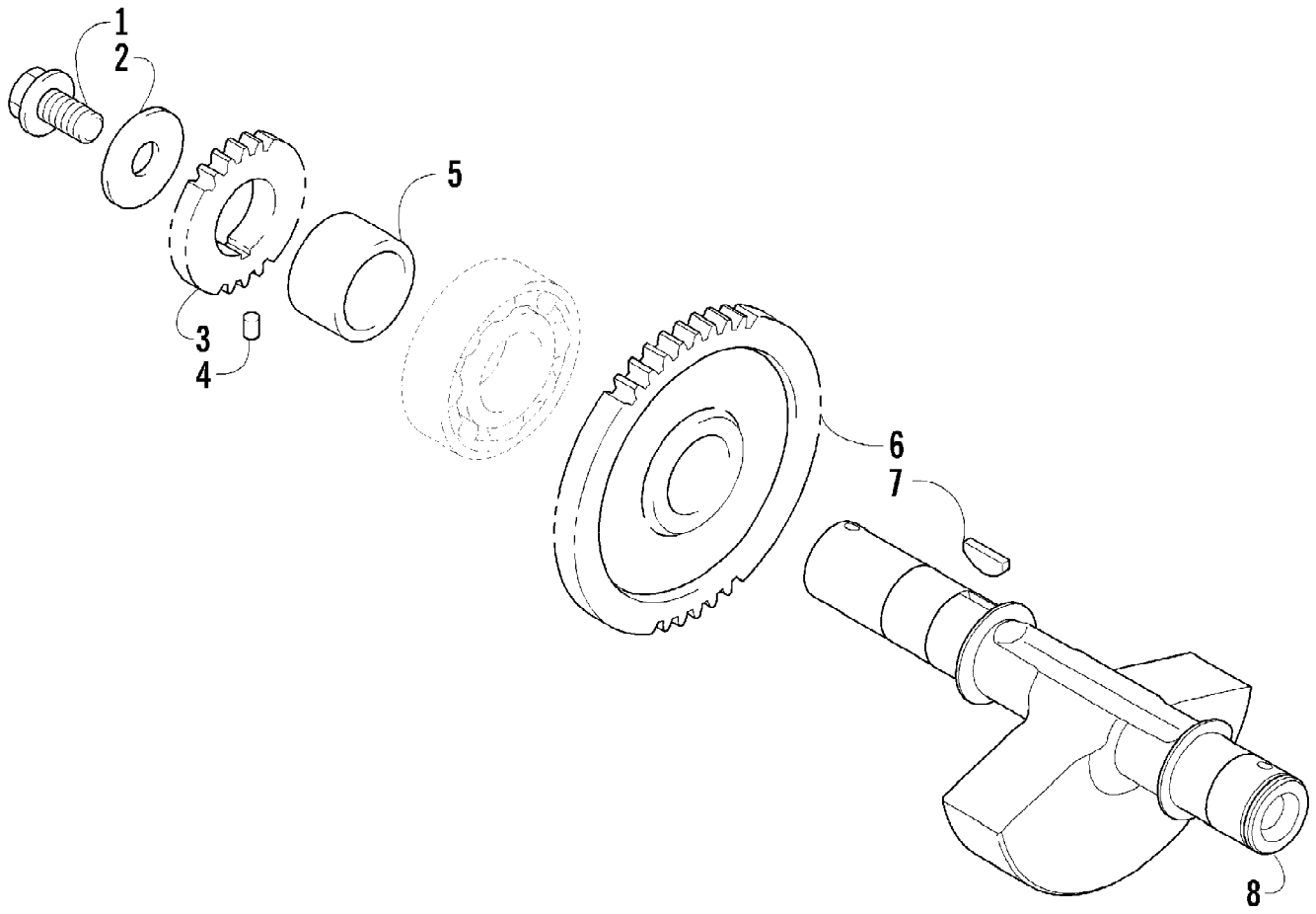

www.mymowerparts.com

For Arctic Cat Discount Parts Call 606-678-9623 or 606-561-4983

CRANK BALANCER ASSEMBLY

Ref #	Part Number	Qty	S/P/F	Description
1	0826-033	1		Screw, Cap
2	0828-003	1		Washer
3	0811-003	1		Gear, Oil Pump Drive
4	0829-007	1		Pin, Dowel
5	0811-004	1		Spacer
6	0811-002	1		Gear, Driven
7	0829-006	1		Key
8	0811-017	1		Balancer, Crank

www.mymowerparts.com

For Arctic Cat Discount Parts Call 606-678-9623 or 606-561-4983

CRANKCASE ASSEMBLY

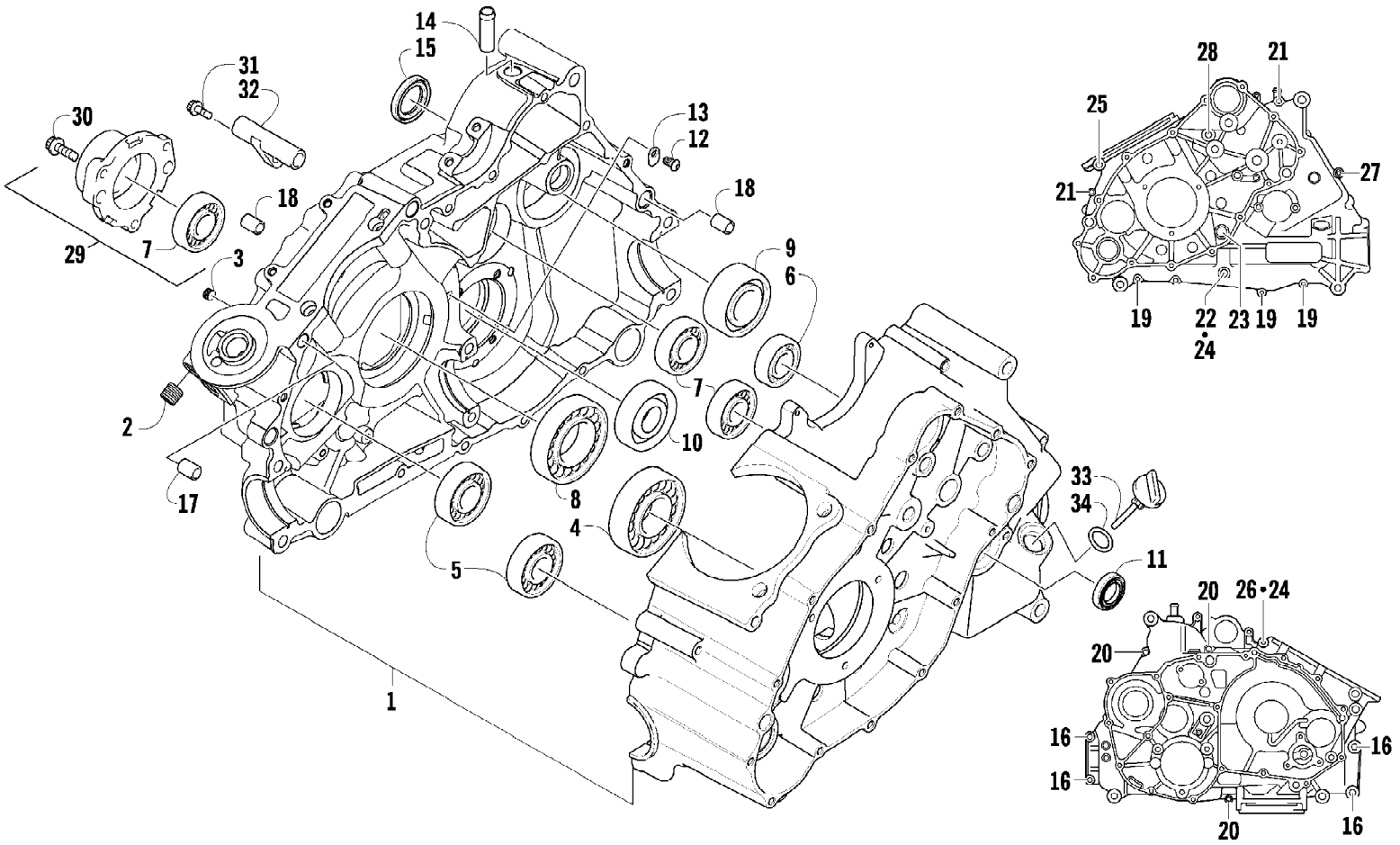

www.mymowerparts.com

For Arctic Cat Discount Parts Call 606-678-9623 or 606-561-4983

CRANKCASE ASSEMBLY

Ref #	Part Number	Qty	S/P/F	Description
1	0801-151	1		Crankcase Assembly (inc. 2-15)
2	0812-064	2		Plug
3	0801-002	1		Plug
4	0832-043	1	/P	Bearing
5	0832-044	2	/P	Bearing
6	0832-049	1	/P	Bearing
7	0832-050	3	/P	Bearing
8	0832-042	1	/P	Bearing
9	0832-048	1	/P	Bearing
10	0832-077	1	/P	Bearing
11	0822-052	1		Seal, Countershaft
12	0826-100	4		Screw, Machine
13	0822-010	4	/P	Retainer, Bearing
14	0801-028	1		Pipe, Breather
15	0830-035	1		Seal, Driveshaft
16	8412-850	4		Screw, Cap
17	0829-003	1		Pin, Dowel
18	0829-002	5		Pin, Dowel
19	8468-645	3		Screw, Machine
20	8468-655	3		Screw, Machine
21	8468-675	2		Screw, Machine
22	8412-860	1		Screw, Cap
23	0826-017	1		Screw, Cap
24	0830-008	2		Gasket
25	0826-019	1		Screw, Cap
26	0826-018	1		Screw, Cap
27	8468-695	1		Screw, Machine
28	8468-680	1		Screw, Machine
29	0801-029	1		Housing, Secondary Shaft (inc. one No. 7)
30	0826-105	3		Screw, Cap
31	0826-038	1		Screw, Cap
32	0801-069	1		Pipe, Breather
33	0801-073	1		Stick, Oil Level (inc. 34)
34	0830-010	1		O-Ring

www.mymowerparts.com

For Arctic Cat Discount Parts Call 606-678-9623 or 606-561-4983

CRANKSHAFT AND PISTON ASSEMBLY

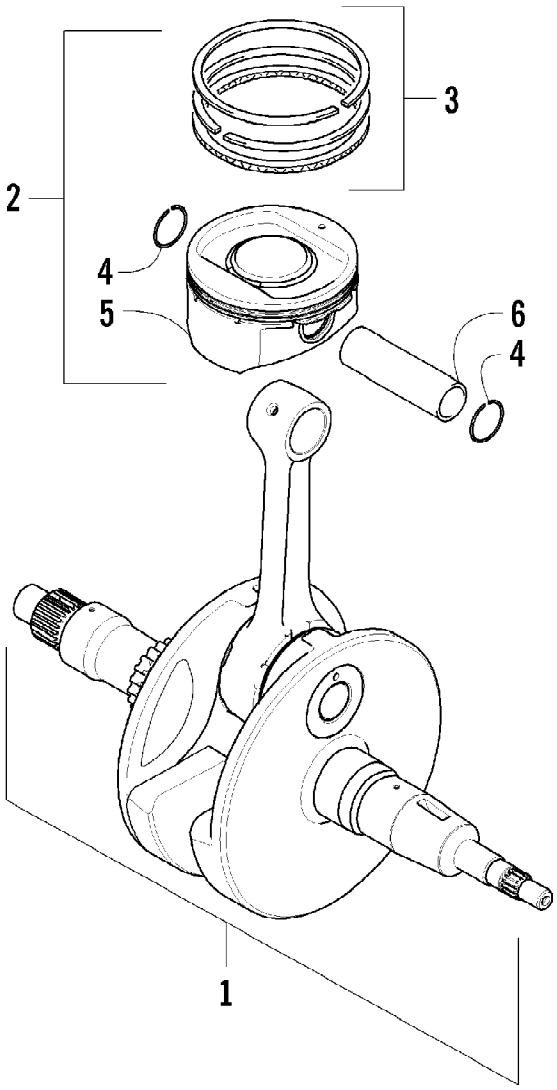

www.mymowerparts.com

For Arctic Cat Discount Parts Call 606-678-9623 or 606-561-4983

CRANKSHAFT AND PISTON ASSEMBLY

Ref #	Part Number	Qty	S/P/F	Description
1	0805-073	1	S	Crankshaft Assembly
2	0805-064	1		Piston Set (inc. 3-6)
3	0805-065	1		Ring, Piston - Set
4	0831-001	2		Circlip, Piston Pin
5	0	1	F	Piston
6	0805-012	1		Pin, Piston

www.mymowerparts.com

For Arctic Cat Discount Parts Call 606-678-9623 or 606-561-4983

CYLINDER ASSEMBLY

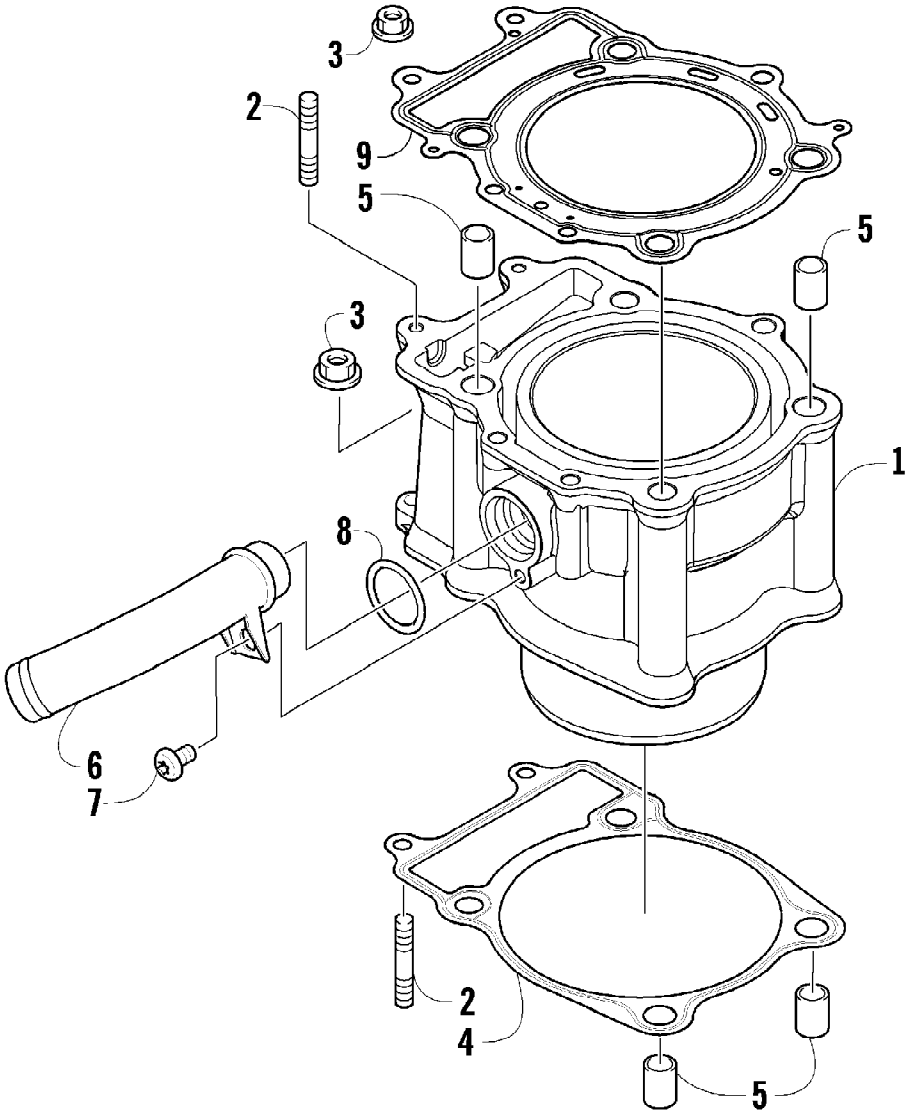

www.mymowerparts.com

For Arctic Cat Discount Parts Call 606-678-9623 or 606-561-4983

CYLINDER ASSEMBLY

Ref #	Part Number	Qty	S/P/F	Description
1	0804-019	1	S	Cylinder
2	0827-002	4		Bolt, Stud
3	8424-604	4		Nut
4	0830-084	1		Gasket, Base
5	0829-002	4		Pin, Dowel
6	0804-047	1	/P	Union, Coolant Hose
7	8468-612	1		Screw, Machine
8	0830-007	1		O-Ring
9	0830-097	1		Gasket, Cylinder Head

www.mymowerparts.com

For Arctic Cat Discount Parts Call 606-678-9623 or 606-561-4983

CYLINDER HEAD AND CAMSHAFT/VALVE ASSEMBLY

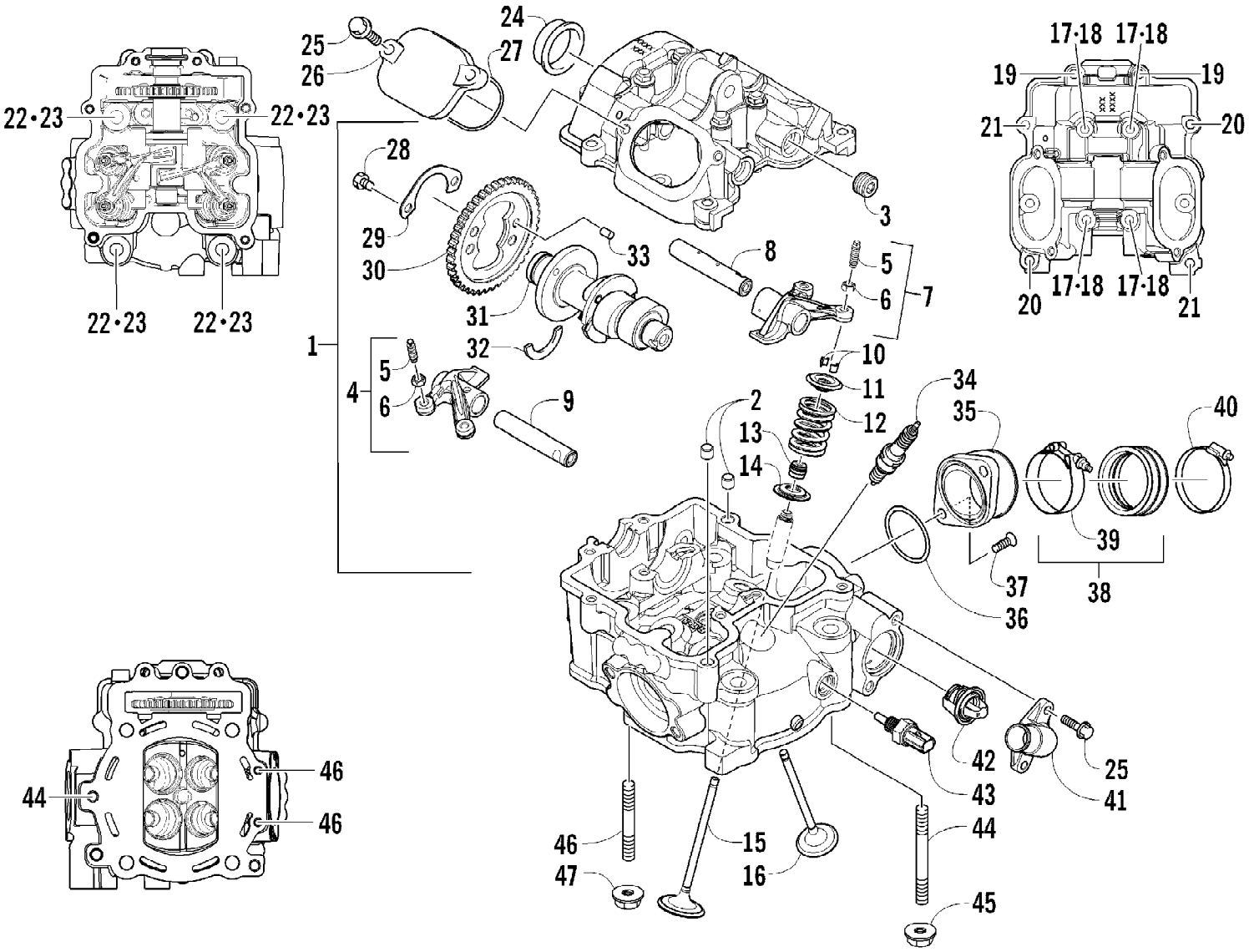

www.mymowerparts.com

For Arctic Cat Discount Parts Call 606-678-9623 or 606-561-4983

CYLINDER HEAD AND CAMSHAFT/VALVE ASSEMBLY

Ref #	Part Number	Qty	S/P/F	Description
1	0808-175	1	S	Head, Cylinder - Assembly (inc. 2-17)
2	0829-048	2	/P	Pin, Dowel
3	0831-083	2		Plug, Shaft
4	0809-237	1	/P	Arm, Valve Rocker - Exhaust (inc. two No. 5-6)
5	0809-240	4	/P	Screw, Adjuster
6	0827-059	4		Nut
7	0809-234	1	/P	Arm, Valve Rocker - Intake (inc. two No. 5-6)
8	0809-241	1		Shaft, Rocker Arm - Intake
9	0809-242	1		Shaft, Rocker Arm - Exhaust
10	0809-233	8		Cotter, Valve
11	0809-232	4		Retainer, Spring
12	0809-231	4	/P	Spring, Valve
13	0830-186	4	/P	Seal, Oil
14	0809-230	4		Seat, Spring - Valve
15	0809-228	2	/P	Valve, Intake
16	0809-229	2	/P	Valve, Exhaust
17	0826-149	4		Screw, Cap
18	0830-155	4	/P	Gasket
19	0826-002	2		Screw, Cap
20	0826-005	2		Screw, Cap
21	0826-006	2		Screw, Cap
22	0808-037	4	/P	Screw, Cap
23	0830-147	4	/P	Washer
24	0808-077	1		Plug, Cylinder Head
25	0826-007	6		Screw, Cap
26	0808-003	2		Cap, Inspection
27	0830-167	2	/P	O-Ring
28	0826-034	2		Screw, Cap
29	0828-004	1		Plate, Retainer
30	0809-002	1		Sprocket
31	0809-245	1	/P	Camshaft
32	0809-003	1		C-Ring
33	0829-049	1		Pin, Dowel
34	0217-799	1	/P/F	Spark Plug
35	0470-668	1		Flange, Intake Manifold
36	0830-090	1		O-Ring
37	0826-008	2		Screw, Machine
38	0437-069	1	/P	Boot (inc. 39)
39	1423-041	1		Clamp
40	0423-066	1		Clamp
41	0808-008	1		Cover, Thermostat
42	0808-078	1		Thermostat
43	0808-124	1		Sensor, Engine Coolant Temperature
44	0827-031	1		Bolt, Stud
45	8424-804	1		Nut
46	0827-030	2		Bolt, Stud
47	8424-604	2		Nut

www.mymowerparts.com

For Arctic Cat Discount Parts Call 606-678-9623 or 606-561-4983

DASH ASSEMBLY

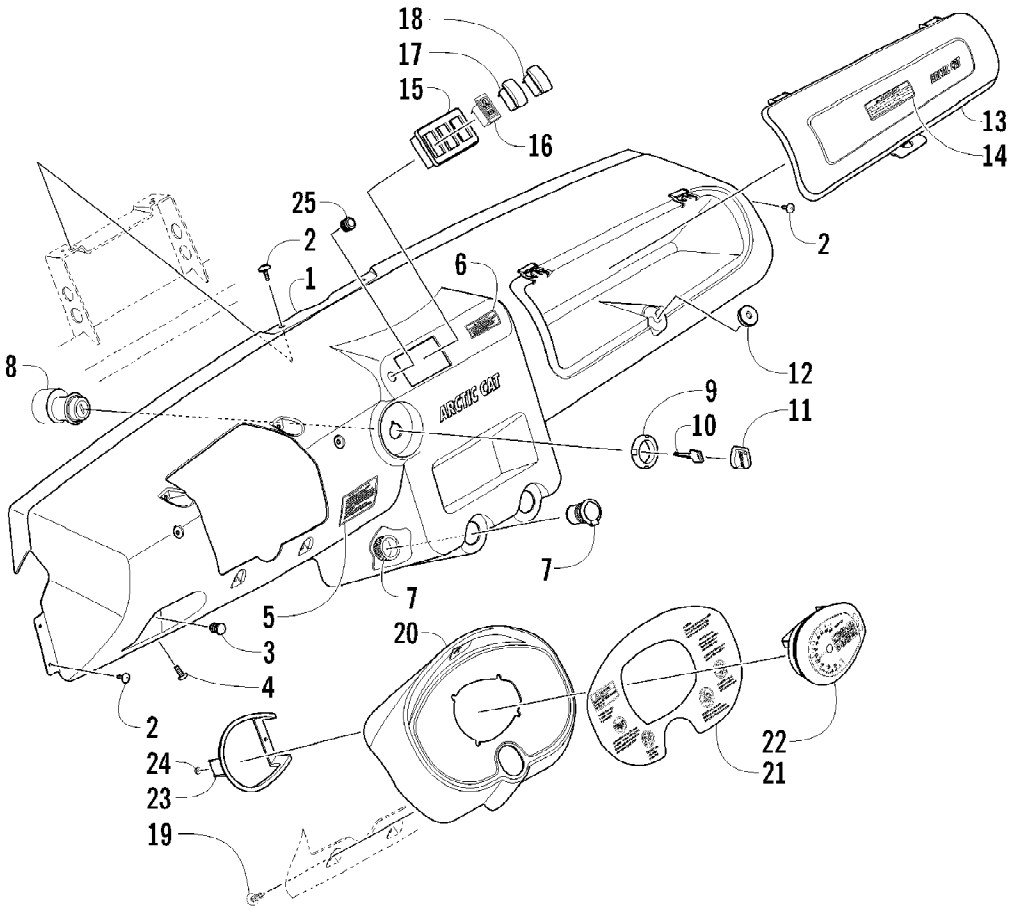

www.mymowerparts.com

For Arctic Cat Discount Parts Call 606-678-9623 or 606-561-4983

DASH ASSEMBLY

Ref #	Part Number	Qty	S/P/F	Description
1	4506-357	1		Panel, Dash
2	0623-784	6		Screw, Self-Tapping
3	1623-697	1		Plug
4	0423-419	3		Screw, Machine
5	1411-904	1		Decal, Starting
6	1411-124	1		Decal, Warning - Differential Lock
7	0641-897	2	/P	Outlet, Accessory - 12V
8	0430-089	1	/P	Switch, Ignition (inc. 9-11)
9	0430-050	1		Nut, Flange - Ignition Switch
10	0430-042	1		Key, Ignition - Series (Y Series - Left-Side Cut)
10	0430-043	1		Key, Ignition - Series (Z Series - Right-Side Cut)
11	0430-054	1		Cover, Key
12	0423-541	1		Grommet, Latch - Glove Box
13	4506-420	1	/P	Cover, Glove Box (inc. 14)
14	2411-512	1	/P	Decal, Warning - Passenger
15	0409-069	1		Panel, Switch-Mount
16	0420-111	1		Light, Indicator
17	0409-067	1		Switch, Light
18	0409-061	1		Switch, 2WD/4WD/Differential Lock
19	0423-342	6	/P	Screw, Self-Tapping
20	1406-727	1		Pod, Instrument
21	1411-125	1		Decal, Warning - Dash
22	0520-072	1		Gauge, Analog/LCD
23	0420-065	1	/P	Bracket, Retaining
24	0423-493	2		Nut w/Washer
25	1602-917	AR		Plug

www.mymowerparts.com

For Arctic Cat Discount Parts Call 606-678-9623 or 606-561-4983

DRIVE TRAIN ASSEMBLY

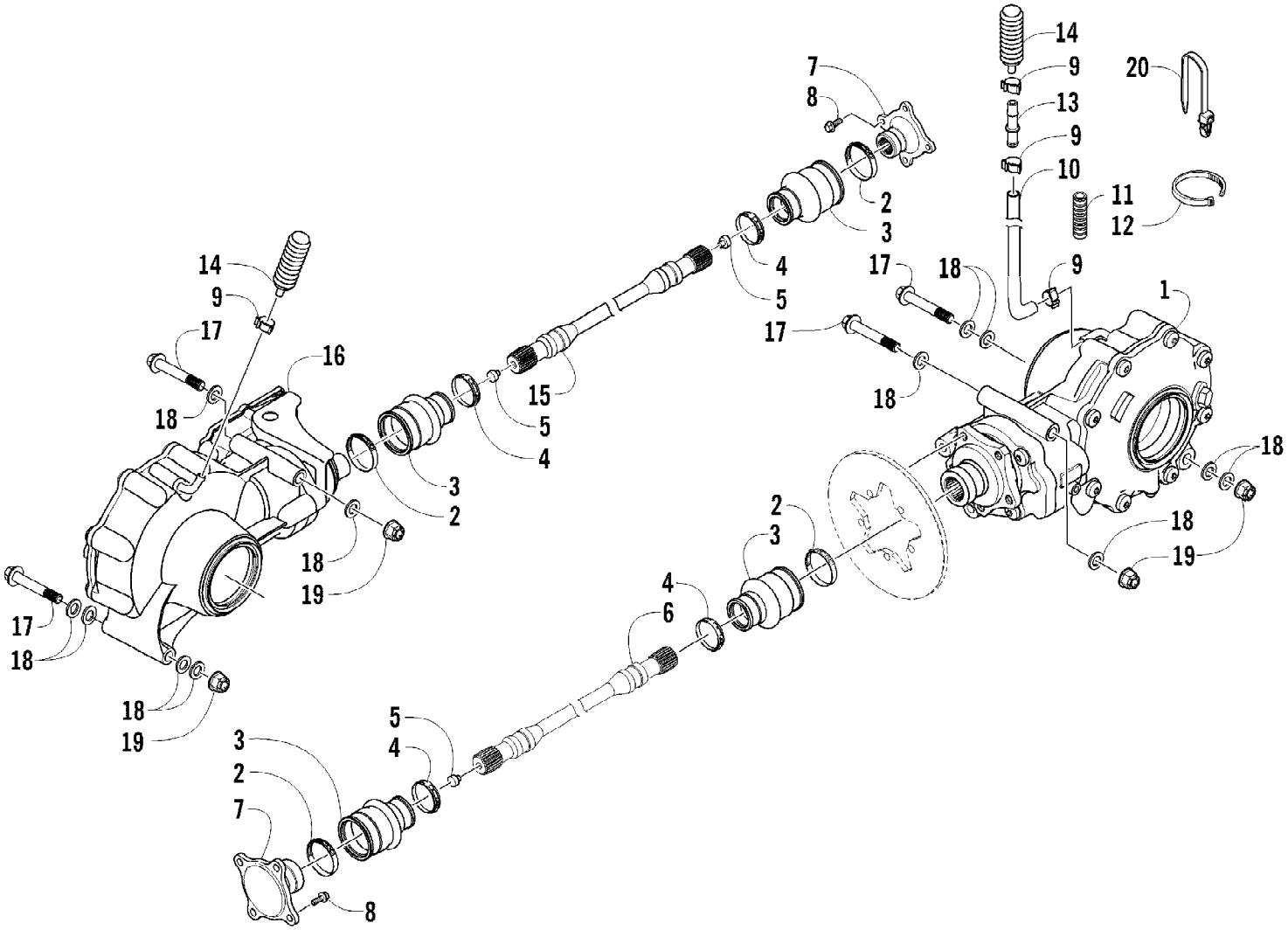

www.mymowerparts.com

For Arctic Cat Discount Parts Call 606-678-9623 or 606-561-4983

DRIVE TRAIN ASSEMBLY

Ref #	Part Number	Qty	S/P/F	Description
1	1502-607	1		Gearcase, Rear
2	0423-393	4		Clamp
3	0402-985	4	/P	Boot, Coupler
4	0423-411	4		Clamp
5	0673-618	4	/P	Bumper, Driveshaft
6	1402-272	1		Shaft, Propeller - Rear
7	0402-950	2		Flange, Output
8	8408-820	8	/P	Screw, Cap
9	0423-670	4		Clamp, Hose
10	0410-070	AR	/P	Hose, Vent - 25 ft
11	0419-392	AR		Conduit - 3 ft
12	0123-788	AR	/P	Tie, Cable - 8 in.
13	0470-702	1	/P	Fitting, Vent
14	1402-620	2	/P	Bladder, Gearcase
15	1402-271	1		Shaft, Propeller - Front
16	1502-400	1		Gearcase, Front
17	0423-404	4		Screw, Cap
18	0423-426	12		Washer
19	8428-002	4		Nut, Lock
20	0423-075	AR		Tie, Cable - Push-Mount

www.mymowerparts.com

For Arctic Cat Discount Parts Call 606-678-9623 or 606-561-4983

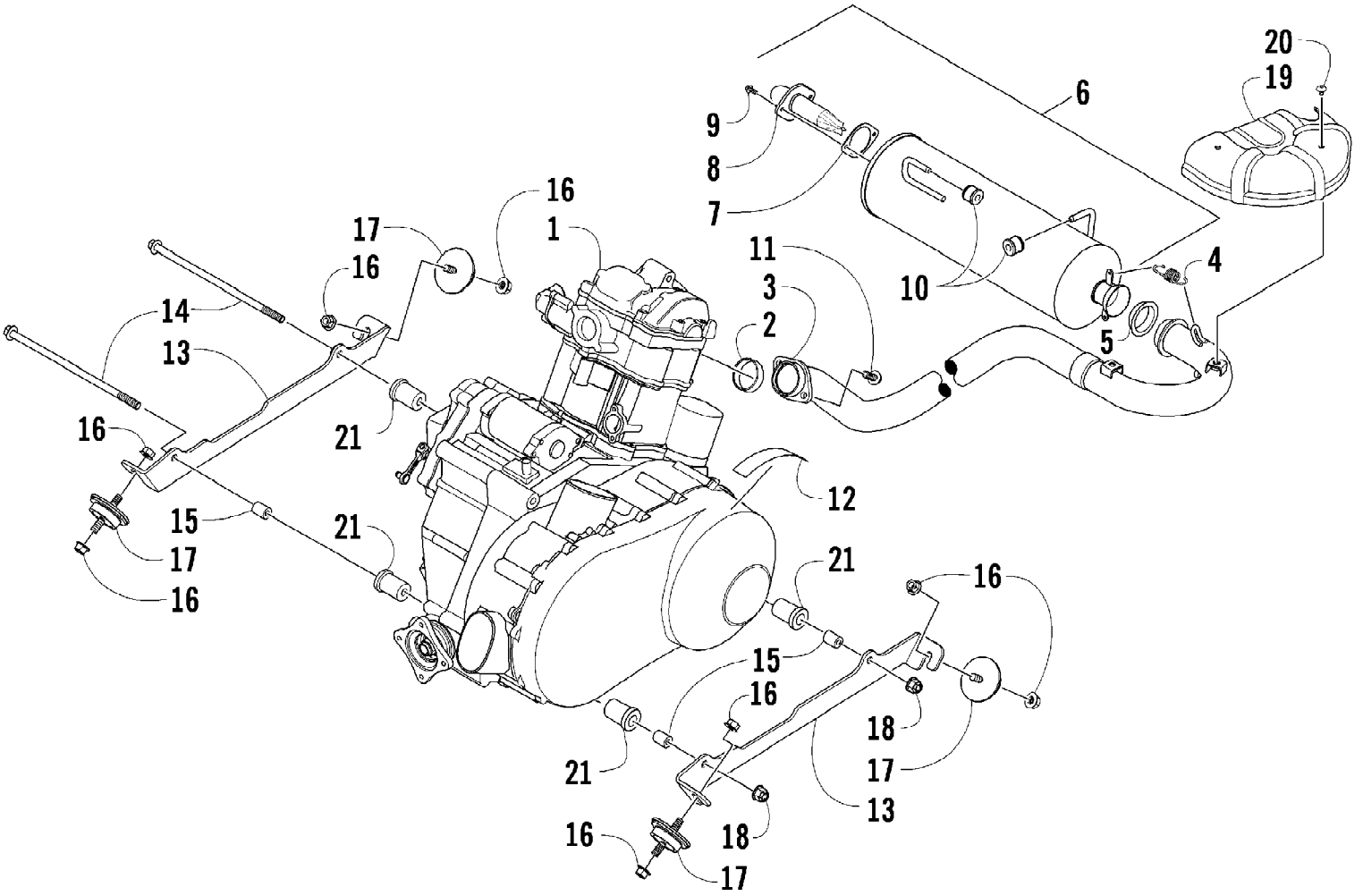

www.mymowerparts.com

For Arctic Cat Discount Parts Call 606-678-9623 or 606-561-4983

Ref #	Part Number	Qty	S/P/F	Description
1	0800-091	1		Engine, A550G
2	0412-338	1	/P	Gasket, Exhaust Pipe
3	0512-427	1		Pipe, Exhaust
4	0612-668	2	/P	Spring
5	0412-375	1	/P	Seal, Exhaust
6	0512-401	1		Muffler - Assembly (inc. 7-9)
7	0412-438	1		Gasket, Spark Arrester
8	0512-432	1		Spark Arrester Assembly
9	8408-616	2		Screw, Cap
10	0412-577	2	/P	Bushing
11	8408-820	2	/P	Screw, Cap
12	0411-426	1		Decal, Warning - Clutch Cover
13	1506-998	1		Bracket, Engine - Right
13	1506-999	1		Bracket, Engine - Left
14	1423-063	2	S	Screw, Cap
15	1423-025	3	/P	Spacer, Engine Mount
16	8424-002	8		Nut
17	0408-014	4		Mount, Engine
18	8428-002	2		Nut, Lock
19	0412-462	1		Shield, Heat
20	8477-610	2		Screw, Machine
21	0801-180	4	/P	Bushing, Engine Mount

www.mymowerparts.com

For Arctic Cat Discount Parts Call 606-678-9623 or 606-561-4983

FRAME AND RELATED PARTS

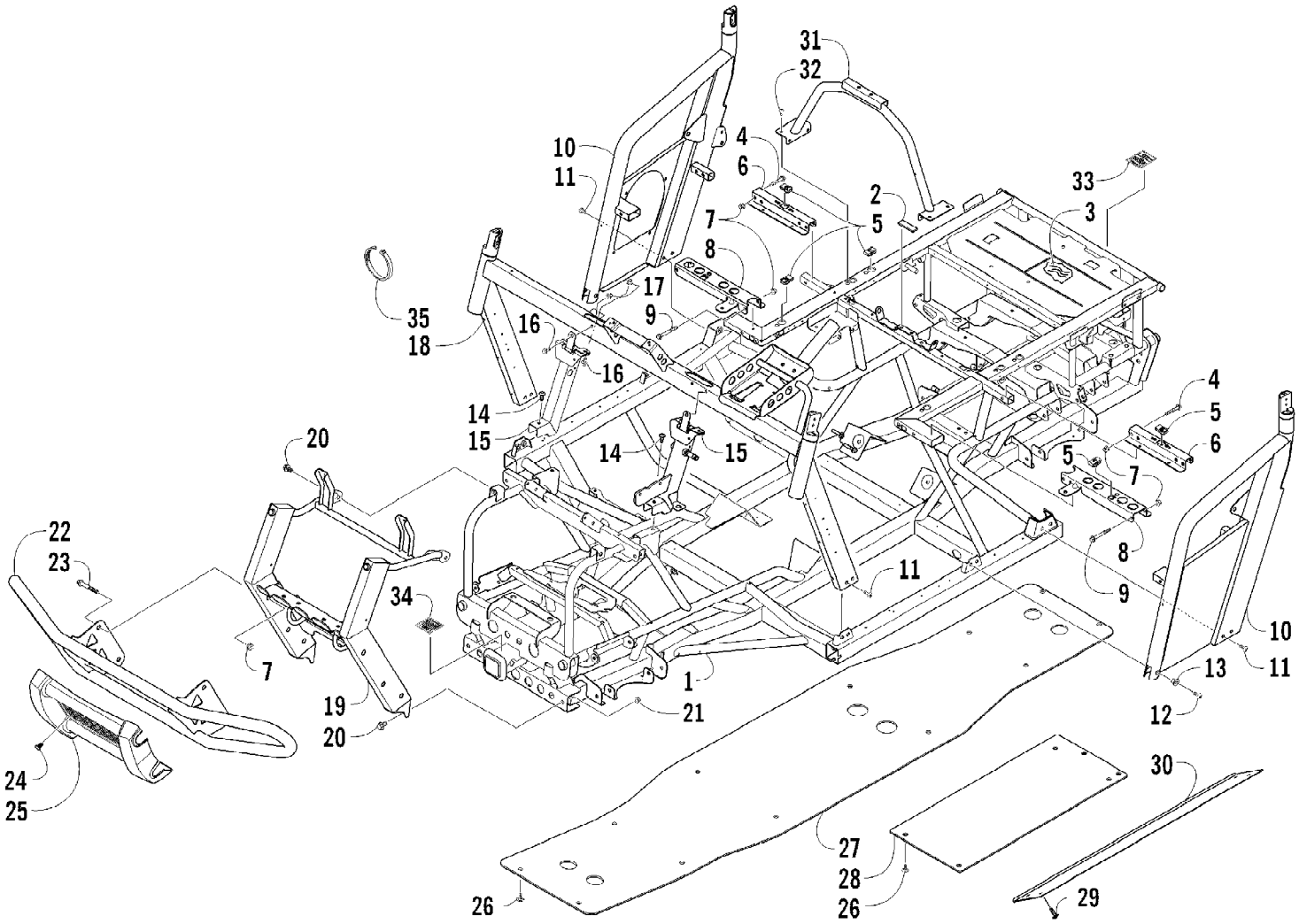

www.mymowerparts.com

For Arctic Cat Discount Parts Call 606-678-9623 or 606-561-4983

FRAME AND RELATED PARTS

Ref #	Part Number	Qty	S/P/F	Description
1	2516-497	1	/P	Frame, Main (inc. 2-3)
2	0406-879	1		Bumper, Seat
3	0412-461	1		Foil, Protective
4	8408-850	6		Screw, Cap
5	0423-577	12		Clip, U-Nut
6	1506-842	2		Bracket, Seat Support - Rear
7	8427-802	14		Nut, Lock
8	2516-644	1		Bracket, Seat Support - Front - Right
8	2516-645	1		Bracket, Seat Support - Front - Left
9	8408-870	4		Screw, Cap
10	4506-506	1		Support, Overhead - Right
10	4506-507	1		Support, Overhead - Left
11	0423-817	8		Screw, Machine
12	0423-886	2		Screw, Machine
13	1423-051	2		Spacer
14	8476-820	2		Screw, Machine
15	0505-688	1		Bracket, Steering Support - Right
15	1502-797	1		Bracket, Steering Support - Left
16	8408-820	6	/P	Screw, Cap
17	8424-802	6		Nut
18	4506-019	1		Support, Steering
19	2516-558	1	/P	Bracket, Mounting - Bumper
20	8409-020	4	/P	Screw, Cap
21	8427-002	2		Nut, Lock
22	2506-779	1		Bumper
23	8408-860	4		Screw, Cap
24	8477-616	4		Screw, Machine
25	2406-713	1		Fascia, Bumper - Front
26	0423-545	20	/P	Screw, Shoulder
27	1406-720	1		Plate, Skid - Center
28	1406-721	2		Panel, Belly - Side
29	0423-849	8		Screw, Self-Tapping
30	2506-612	2		Plate, Skid - Side
31	2506-638	1		Support, Canopy
32	8476-616	4		Screw, Machine
33	1411-123	1		Decal, Warning - Towing - Rear
34	1411-122	1		Decal, Warning - Towing - Front
35	0123-788	AR	/P	Tie, Cable - 8 in.

www.mymowerparts.com

For Arctic Cat Discount Parts Call 606-678-9623 or 606-561-4983

FRONT BRAKE ASSEMBLY

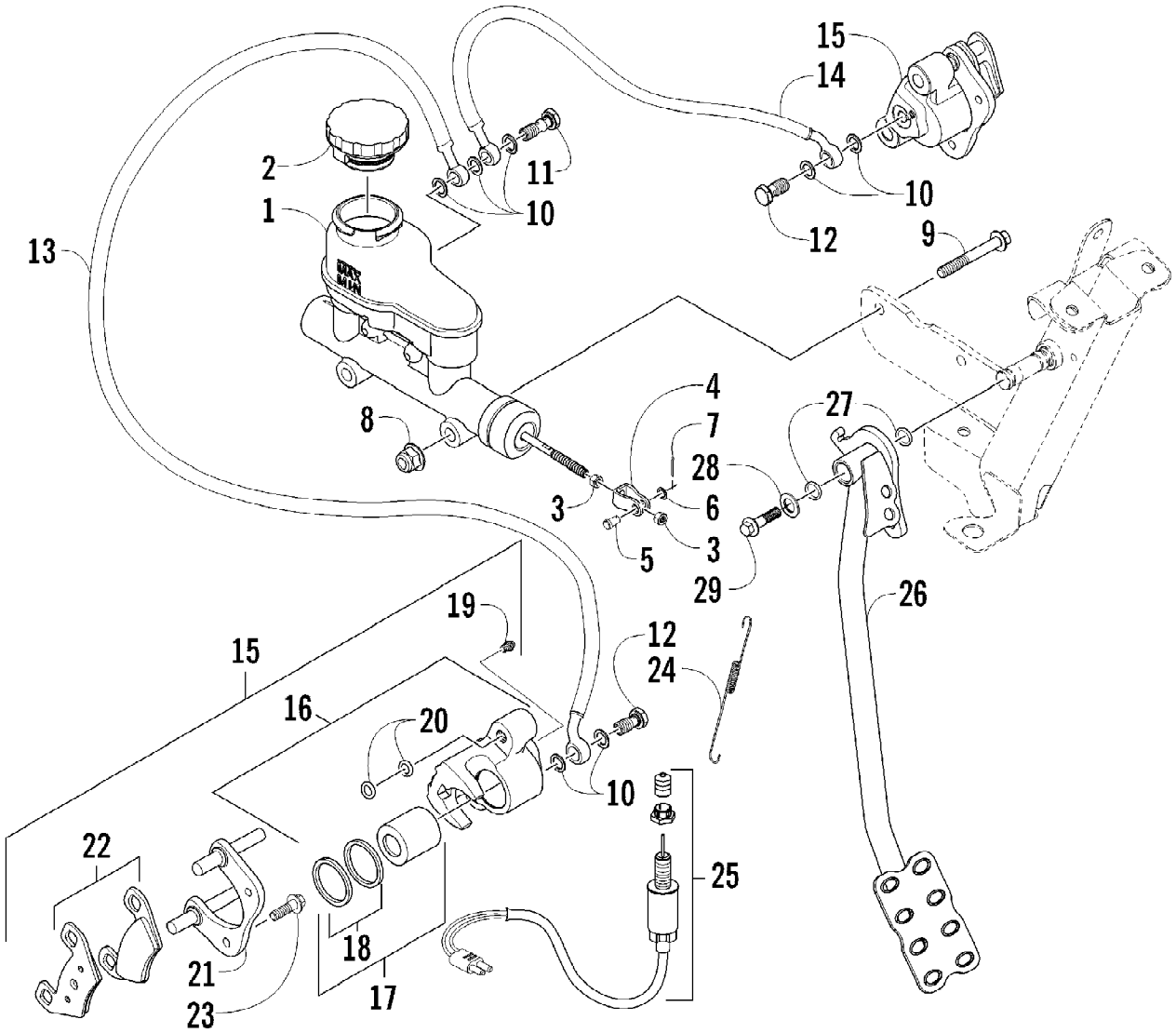

www.mymowerparts.com

For Arctic Cat Discount Parts Call 606-678-9623 or 606-561-4983

FRONT BRAKE ASSEMBLY

Ref #	Part Number	Qty	S/P/F	Description
1	0502-786	1		Cylinder, Master Brake - Assembly (inc. 2-4)
2	0405-225	1		Cap, Reservoir
3	0402-592	2		Nut
4	1402-520	1		Clevis
5	1402-377	1		Pin, Clevis
6	8050-217	1	/P	Washer
7	0117-868	1		Pin, Cotter
8	8424-802	2		Nut
9	8408-860	2		Screw, Cap
10	0423-178	7		Washer, Crush
11	0423-610	1		Bolt, Double Banjo-Fitting
12	0423-413	2		Bolt, Banjo-Fitting
13	1402-389	1		Hose, Brake - Left
14	1402-290	1		Hose, Brake - Right
15	1502-730	1	/P	Caliper, Brake - Front Right (inc. 16-22)
15	1502-731	1	/P	Caliper, Brake - Front Left (inc. 16-22)
16	1436-160	1	/P	Housing, Caliper - Assembly - Front Right (inc. 17-19)
16	1436-161	1	/P	Housing, Caliper - Assembly - Front Left (inc. 17-19)
17	0502-606	2		Piston/Seal Set (inc. 18)
18	0502-607	2		Seal Set
19	0502-609	2	/P	Valve, Bleed
20	0502-608	2		O-Ring, Guide - Set
21	0502-960	2		Bracket Assembly
22	1502-694	2	S	Pad, Brake - Set
23	8408-826	4		Screw, Cap
24	0502-785	1		Spring, Brake Switch
25	0409-089	1		Switch, Brake - Assembly
26	1502-692	1		Lever, Brake
27	1602-213	2	/P	O-Ring
28	0623-044	1		Washer
29	8408-822	1		Screw, Cap

www.mymowerparts.com

For Arctic Cat Discount Parts Call 606-678-9623 or 606-561-4983

FRONT DRIVE GEARCASE ASSEMBLY

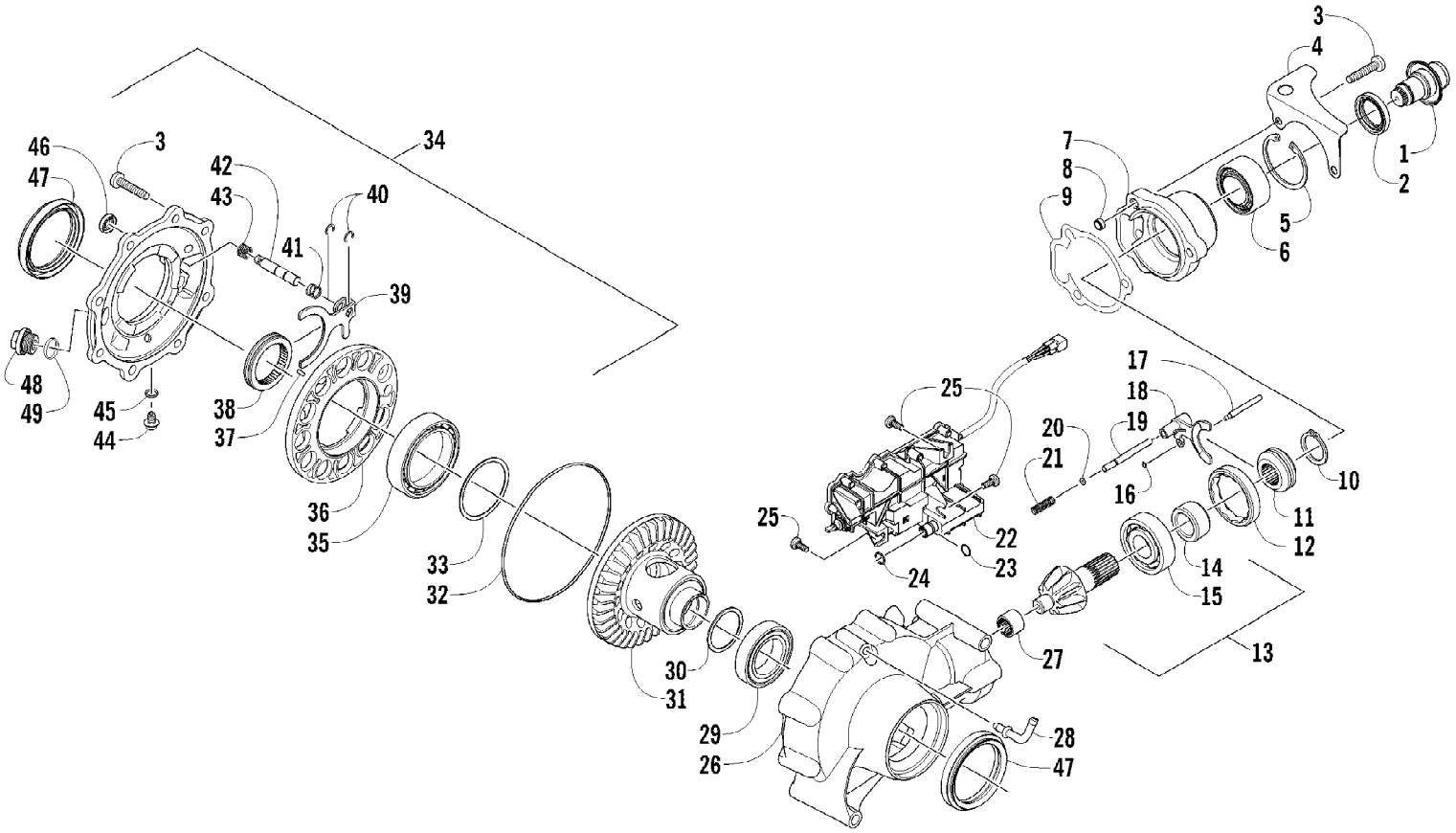

www.mymowerparts.com

For Arctic Cat Discount Parts Call 606-678-9623 or 606-561-4983

FRONT DRIVE GEARCASE ASSEMBLY

Ref #	Part Number	Qty	S/P/F	Description
	1502-400	1		Complete Front Drive Gearcase Assembly
1	1502-085	1	/P	Shaft, Input - Assembly
2	1402-011	1		Seal
3	0423-118	11		Screw, Self-Tapping
4	1502-237	1		Bracket, Actuator
5	0423-423	1		Ring, Retaining
6	1402-043	1		Bearing
7	0502-528	1	/P	Housing, Pinion
8	0402-411	1		Pin, Dowel
9	0402-947	1		Gasket
10	0423-417	1		Ring, Retaining
11	0402-413	1		Coupler, Drive
12	0402-357	1		Collar, Lock
13	0502-649	1		Gear, Pinion - Assembly - 9T (inc. 14-15)
14	0402-336	1		Collar, Retaining
15	0402-327	1		Bearing
16	0423-402	1		Ring, Retaining
17	0402-997	1		Shaft, Selector
18	0402-998	1		Fork, Selector
19	0402-417	1		Shaft, Shuttle
20	0423-147	1		O-Ring
21	0402-999	1		Spring, Return
22	0502-585	1	S	Actuator (inc. 23)
23	1402-981	1		O-Ring
24	0423-892	1	/P	O-Ring
25	0423-396	3		Screw, Self-Tapping
26	0502-548	1		Housing, Gearcase
27	0402-328	1		Bearing
28	1402-442	1		Fitting, Elbow
29	0402-393	1		Bearing
30	0402-405	AR		Shim, 41 x 49 x 1.3 mm
30	0402-406	AR		Shim, 41 x 49 x 1.4 mm
30	0402-407	AR		Shim, 41 x 49 x 1.5 mm
30	0402-408	AR		Shim, 41 x 49 x 1.6 mm
30	0402-409	AR		Shim, 41 x 49 x 1.7 mm
31	1502-556	1	/P	Gear, Ring - 36T
32	0423-149	1		O-Ring
33	1402-074	AR		Shim, 61 x 69 x 1.3 mm
33	1402-075	AR		Shim, 61 x 69 x 1.4 mm
33	1402-076	AR		Shim, 61 x 69 x 1.5 mm
33	1402-077	AR		Shim, 61 x 69 x 1.6 mm
33	1402-078	AR		Shim, 61 x 69 x 1.7 mm
34	1502-238	1		Cover, Gearcase (inc. 35-46 and one No. 47)
35	1402-053	1		Bearing
36	0502-413	1		Flange, Bearing
37	1402-079	1		Pin
38	1402-042	1		Collar, Sliding
39	1402-054	1		Fork
40	1402-058	2		Ring, Retaining
41	1402-057	1		Spring
42	1402-656	1		Shaft, Lock
43	1402-063	1		Spring
44	1402-210	1	/P	Plug, Drain (inc. 45)

www.mymowerparts.com

For Arctic Cat Discount Parts Call 606-678-9623 or 606-561-4983

Ref #	Part Number	Qty	S/P/F	Description
45	0423-153	1		O-Ring
46	1402-056	1		Seal
47	1402-713	2	S	Seal
48	0402-333	1	/P	Plug, Drain (inc. 49)
49	0423-154	1		O-Ring

www.mymowerparts.com

For Arctic Cat Discount Parts Call 606-678-9623 or 606-561-4983

FRONT SUSPENSION ASSEMBLY

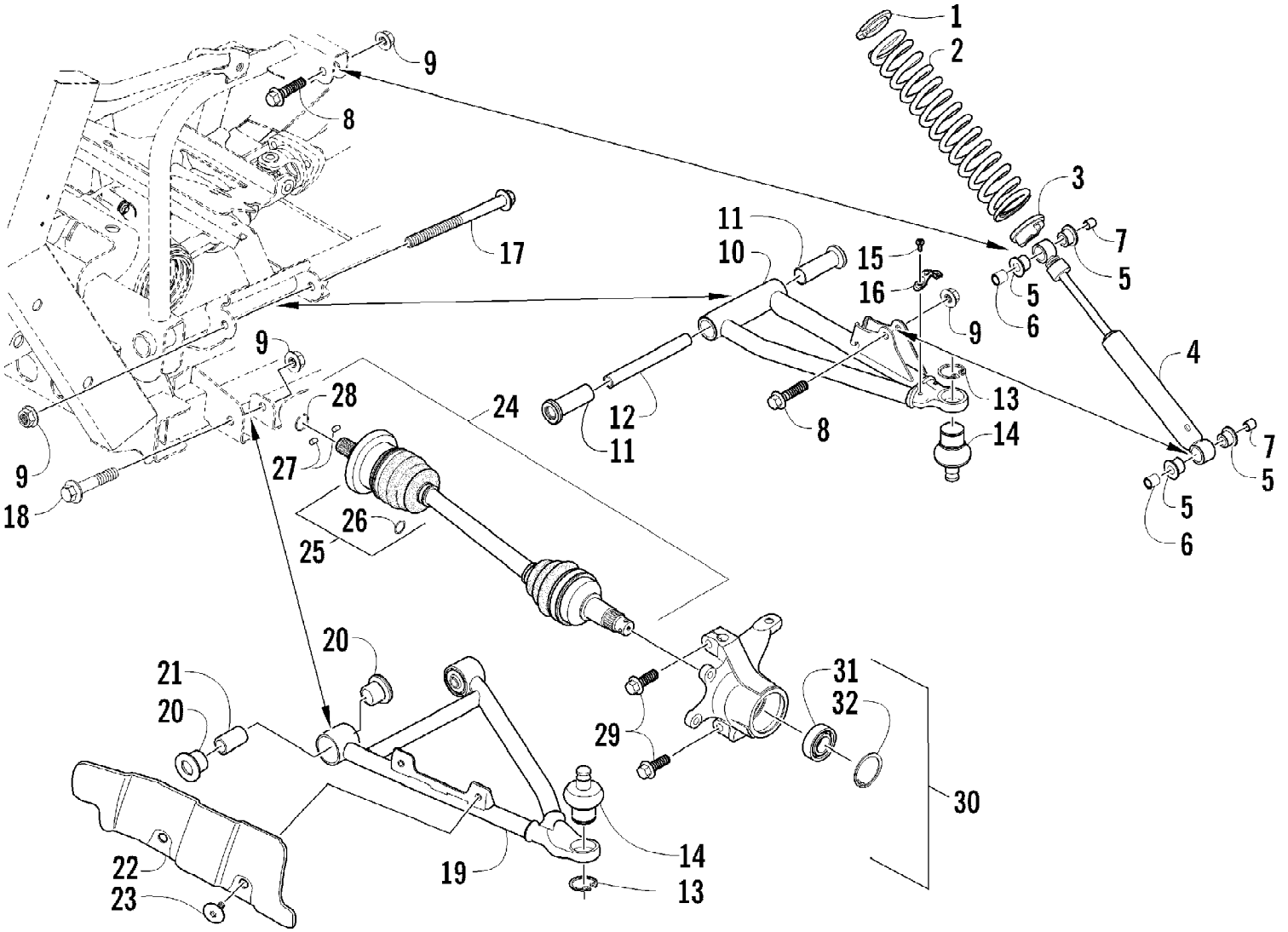

www.mymowerparts.com

For Arctic Cat Discount Parts Call 606-678-9623 or 606-561-4983

FRONT SUSPENSION ASSEMBLY

Ref #	Part Number	Qty	S/P/F	Description
1	1603-889	2	/P	Retainer, Spring
2	0403-211	2		Spring, Suspension
3	0403-102	2		Cam, Spring Adjuster
4	0403-147	2		Shock Absorber (inc. 5-6)
5	0603-955	8		Bushing
6	1603-209	4		Sleeve
7	0404-116	4		Sleeve
8	8409-040	4		Screw, Cap
9	8428-002	10		Nut, Lock
10	0503-416	1	/P	A-Arm, Upper Right (inc. 11-14)
10	0503-417	1	/P	A-Arm, Upper Left (inc. 11-14)
11	0403-207	4	/P	Bushing
12	0403-080	2		Axle
13	0423-009	4	/P	Ring, Retaining
14	0405-115	4	/P	Ball Joint
15	0423-946	4		Screw, Self-Tapping
16	1502-594	2		Clamp, Routing
17	0423-723	2		Screw, Cap
18	8409-075	4		Screw, Cap
19	0503-376	1	/P	A-Arm, Lower Right (inc. 13-14 and 20-21)
19	0503-377	1	/P	A-Arm, Lower Left (inc. 13-14 and 20-21)
20	0403-208	8	/P	Bushing
21	0403-214	4	/P	Axle
22	1406-034	1		Guard, Boot - Right
22	1406-035	1		Guard, Boot - Left
23	0423-545	4	/P	Screw, Shoulder
24	1502-802	1	S/P	Axle, Drive - Right (inc. 25-28)
24	1502-803	1	S	Axle, Drive - Locking - Left (inc. 25-28)
25	1436-419	2		Repair Kit, Boot (inc. 26)
26	1441-988	2		Clip, Retaining
27	1402-885	4		Pin, Detent
28	1402-890	2		Clip, Retaining
29	8409-030	4		Screw, Cap
30	0505-580	1	/P	Knuckle - Assembly - Right (inc. 31-32)
30	0505-581	1	/P	Knuckle - Assembly - Left (inc. 31-32)
31	1402-809	2	/P	Bearing
32	0423-423	2		Ring, Retaining

www.mymowerparts.com

For Arctic Cat Discount Parts Call 606-678-9623 or 606-561-4983

GAS TANK ASSEMBLY

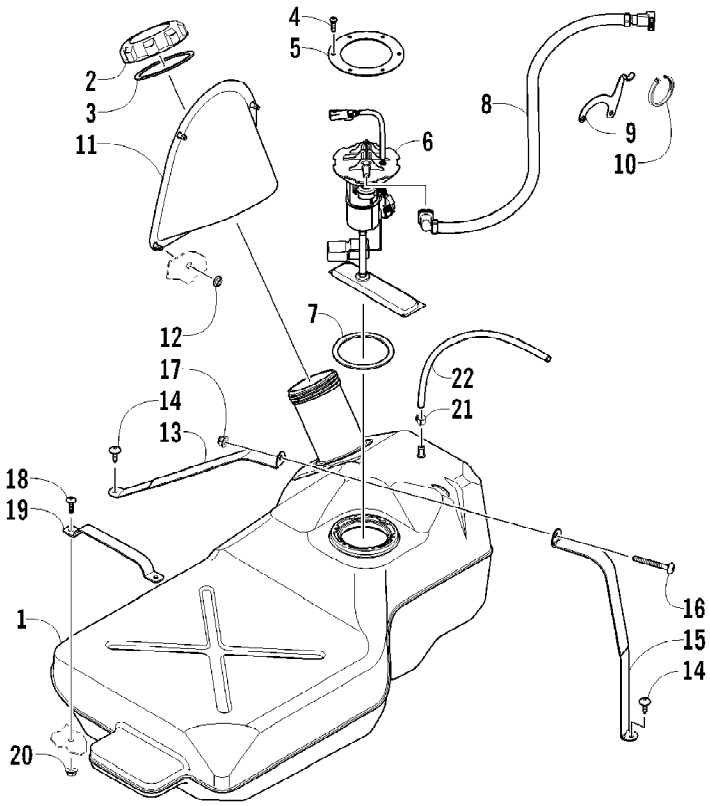

www.mymowerparts.com

For Arctic Cat Discount Parts Call 606-678-9623 or 606-561-4983

GAS TANK ASSEMBLY

Ref #	Part Number	Qty	S/P/F	Description
1	0570-309	1		Tank, Gas - Assembly (inc. 2-5)
2	0470-541	1	/P	Cap, Gas Tank (inc. 3)
3	1670-228	1		Gasket, Gas Tank Cap
4	0423-898	6		Screw, Self-Tapping
5	2670-042	1		Plate, Retaining
6	0570-281	1	S	Pump, Fuel - Assembly (inc. 7)
7	0470-838	1		Seal
8	0470-745	1		Hose, Gasline
9	0470-796	1		Bracket, Support - Gasline
10	0123-788	AR	/P	Tie, Cable - 8 in.
11	1406-886	1		Insert, Gas Tank Cap
12	0423-357	4		Nut, Stamped
13	0470-829	1		Bracket, Hold-Down - Right
14	0623-784	2		Screw, Self-Tapping
15	0470-830	1		Bracket, Hold-Down - Left
16	8476-650	1		Screw, Machine
17	8427-602	1		Nut, Lock
18	8476-620	2		Screw, Machine
19	0470-544	1		Bracket, Hold-Down - Front
20	0623-038	2		Nut w/Washer
21	0423-688	1		Clamp, Hose
22	0410-070	AR	/P	Hose, Gasline - 25 ft

www.mymowerparts.com

For Arctic Cat Discount Parts Call 606-678-9623 or 606-561-4983

GEAR SHIFTING ASSEMBLY

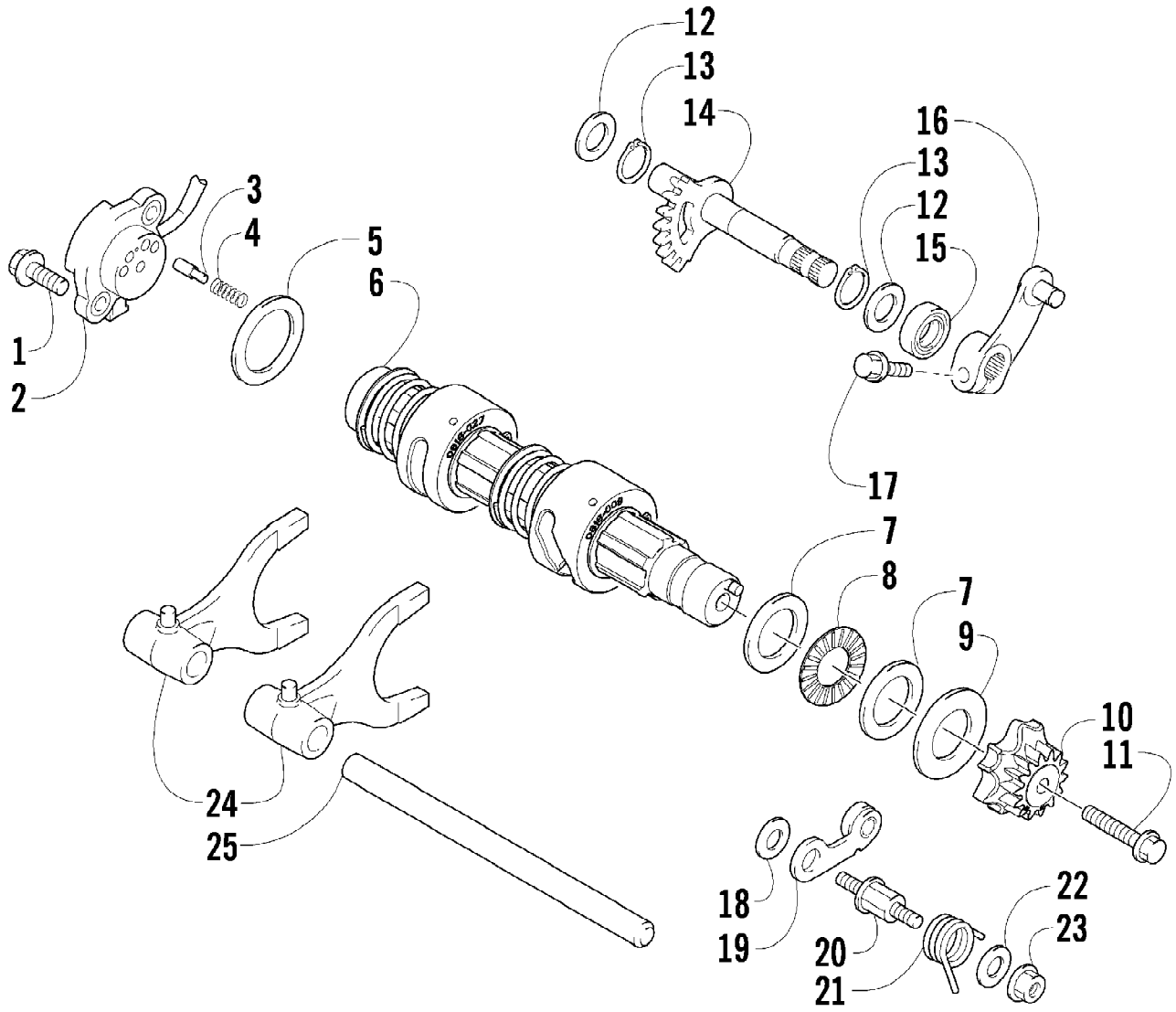

www.mymowerparts.com

For Arctic Cat Discount Parts Call 606-678-9623 or 606-561-4983

GEAR SHIFTING ASSEMBLY

Ref #	Part Number	Qty	S/P/F	Description
1	8470-520	2		Screw, Machine
2	0409-090	1	/P	Switch, Gear Position
3	0818-013	2		Contact
4	0818-017	2		Spring
5	0828-040	1		Washer
6	0818-046	1		Shaft, Gear Shift - Assembly
7	0828-095	2		Washer
8	0832-052	1	/P	Bearing, Thrust
9	0828-037	1		Washer
10	0818-089	1	/P	Plate, Gear Shift Cam
11	0826-006	1		Screw, Cap
12	0828-036	2		Washer
13	0831-010	2		Ring, Retaining
14	0818-007	1	/P	Shaft, Sub-Gear Shift
15	0830-044	1		Seal, Sub-Gear Shift Shaft
16	0818-014	1		Arm, Select
17	8468-620	1	/P	Screw, Machine
18	0828-038	1		Washer
19	0818-002	1		Stopper, Cam
20	0818-004	1		Support, Cam Stopper
21	0818-090	1		Spring
22	0828-035	1		Washer
23	8424-602	1	/P	Nut
24	0818-072	2	/P	Fork, Shift
25	0818-006	1		Shaft, Shift Fork

www.mymowerparts.com

For Arctic Cat Discount Parts Call 606-678-9623 or 606-561-4983

HOOD AND HEADLIGHT ASSEMBLY

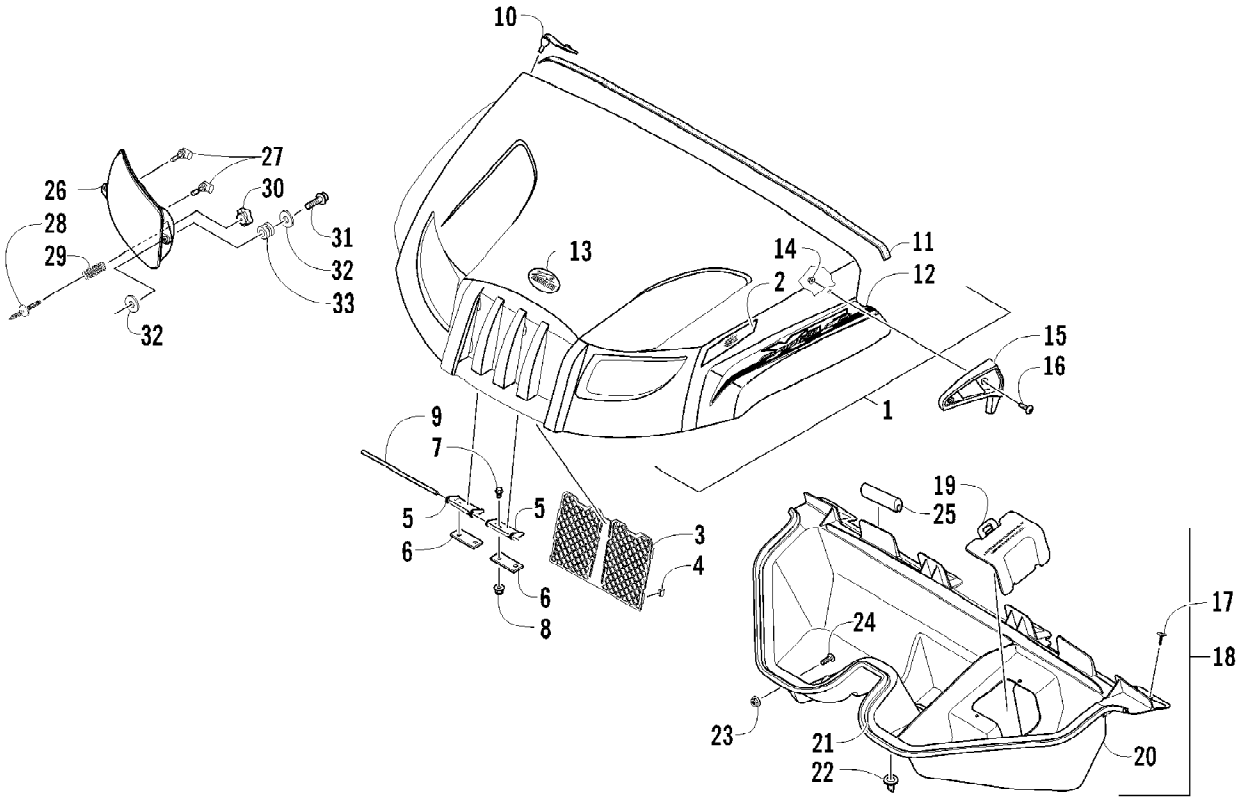

www.mymowerparts.com

For Arctic Cat Discount Parts Call 606-678-9623 or 606-561-4983

HOOD AND HEADLIGHT ASSEMBLY

Ref #	Part Number	Qty	S/P/F	Description
1	4506-478	1		Hood - Assembly (inc. 2)
2	0411-818	1		Decal, Reflector - Right
2	0411-819	1		Decal, Reflector - Left
3	1406-733	1	/P	Screen, Grille
4	0123-987	8		Clip, U
5	2516-606	2		Bracket, Hood
6	2506-868	AR		Shim, Hood
7	8408-820	4	/P	Screw, Cap
8	8427-802	4		Nut, Lock
9	1406-915	1		Pin, Hood
10	2606-624	2		Strap, Hold-Down
11	0417-013	1		Trim, Hood/Dash
12	2411-412	1		Decal, Hood - "Prowler XT" - Right
12	2411-413	1		Decal, Hood - "Prowler XT" - Left
13	2411-416	1		Decal, Hood
14	0423-540	4		Nut, Lock
15	2416-512	1		Louver - Right
15	2416-513	1		Louver - Left
16	0423-356	4		Screw, Shoulder
17	0423-545	4	/P	Screw, Shoulder
18	4506-037	1	/P	Storage, Under-Hood - Assembly (inc. 19-22)
19	1406-944	1		Cover, Access - Master Cylinder
20	2416-520	1		Box, Storage
21	1406-946	1		Seal, Storage Box
22	0470-442	1	/P	Valve, Drain
23	8424-602	2	/P	Nut
24	8476-616	2		Screw, Machine
25	0417-014	AR		Trim, Dash Support
26	0509-044	1	/P	Headlight Assembly - Right (inc. 27)
26	0509-035	1		Headlight Assembly - Left (inc. 27)
27	0409-055	4		Bulb, Headlight
28	0423-514	2		Stud, Adjuster
29	0423-522	2		Spring, Adjuster
30	0423-513	2		Knob, Adjuster
31	0623-785	4		Screw, Self-Tapping
32	8050-217	8	/P	Washer
33	0423-447	4		Grommet

www.mymowerparts.com

For Arctic Cat Discount Parts Call 606-678-9623 or 606-561-4983

MAGNETO ASSEMBLY

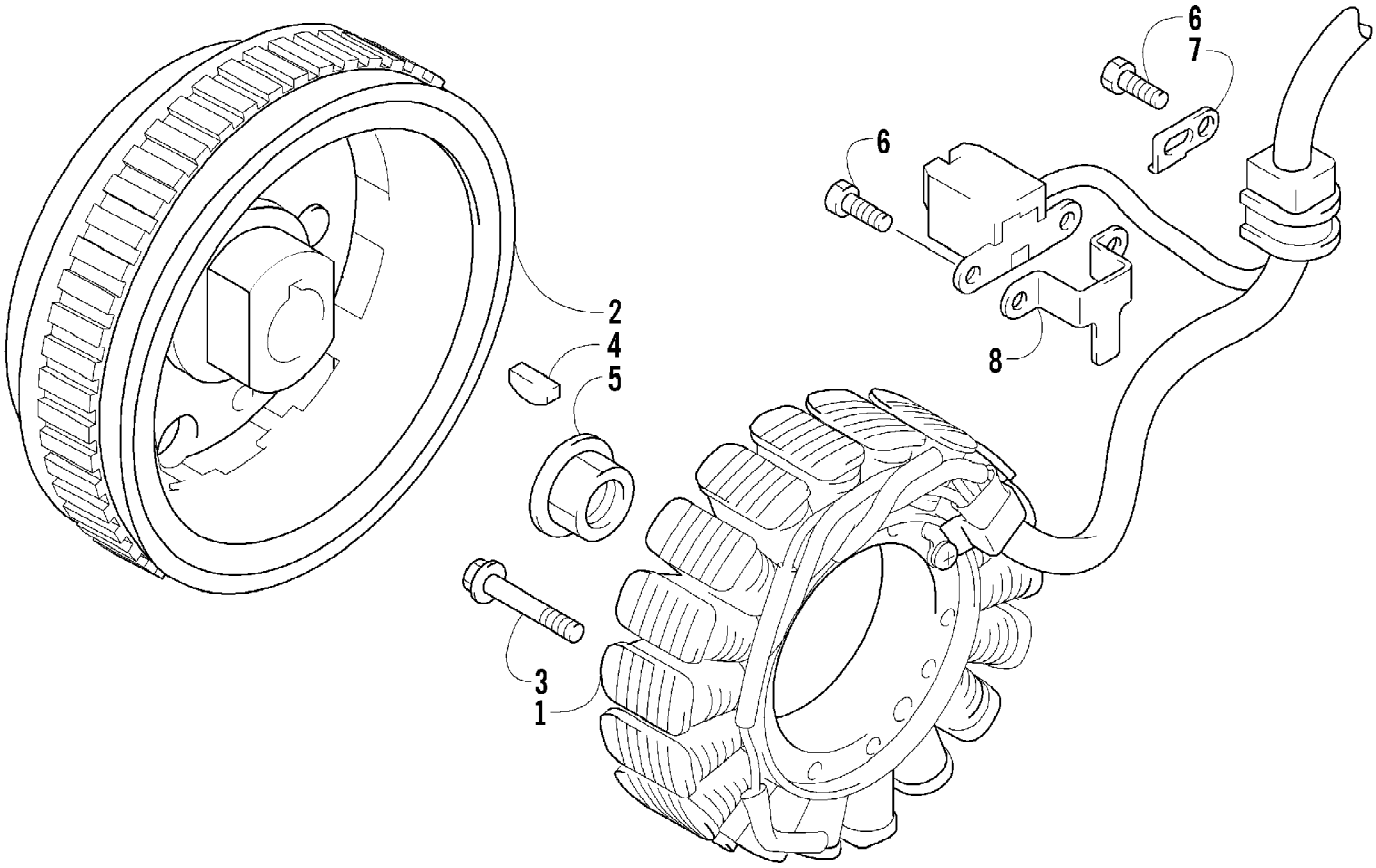

www.mymowerparts.com

For Arctic Cat Discount Parts Call 606-678-9623 or 606-561-4983

MAGNETO ASSEMBLY

Ref #	Part Number	Qty	S/P/F	Description
1	0802-041	1		Stator - Assembly
2	0802-048	1		Rotor/Flywheel
3	0826-102	3		Screw, Machine
4	0829-012	1		Key
5	0827-014	1		Nut
6	8470-510	3		Screw, Machine
7	0802-015	1		Clamp - No. 1
8	0802-016	1		Clamp - No. 2

www.mymowerparts.com

For Arctic Cat Discount Parts Call 606-678-9623 or 606-561-4983

OIL FILTER/PUMP ASSEMBLY

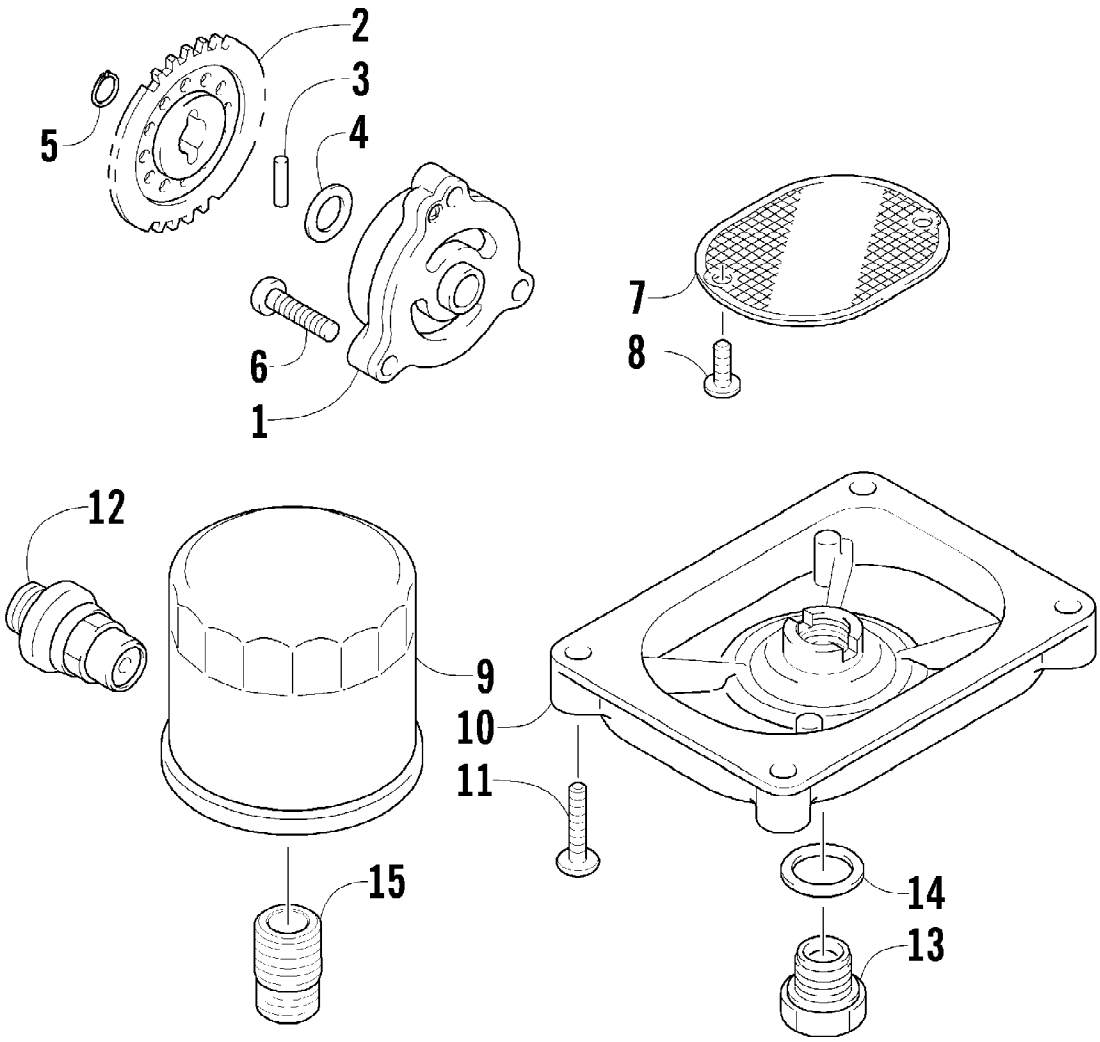

www.mymowerparts.com

For Arctic Cat Discount Parts Call 606-678-9623 or 606-561-4983

OIL FILTER/PUMP ASSEMBLY

Ref #	Part Number	Qty	S/P/F	Description
1	0812-023	1		Pump, Oil
2	0812-083	1	/P	Gear, Driven
3	0829-009	1		Pin
4	0828-007	1	/P	Washer
5	0831-002	1		Ring, Retaining
6	0826-039	3		Screw, Machine
7	0812-057	1	/P	Strainer, Oil
8	0826-040	2		Screw, Machine
9	0812-029	1	S	Filter, Oil
10	0812-053	1		Cap, Oil Strainer
11	8468-625	4		Screw, Machine
12	0812-007	1		Valve, Oil-Relief - Assembly
13	0812-006	1		Plug, Drain
14	0830-017	1		Gasket, Drain Plug
15	0812-008	1		Union, Oil Filter

www.mymowerparts.com

For Arctic Cat Discount Parts Call 606-678-9623 or 606-561-4983

REAR AND PARKING BRAKE ASSEMBLY

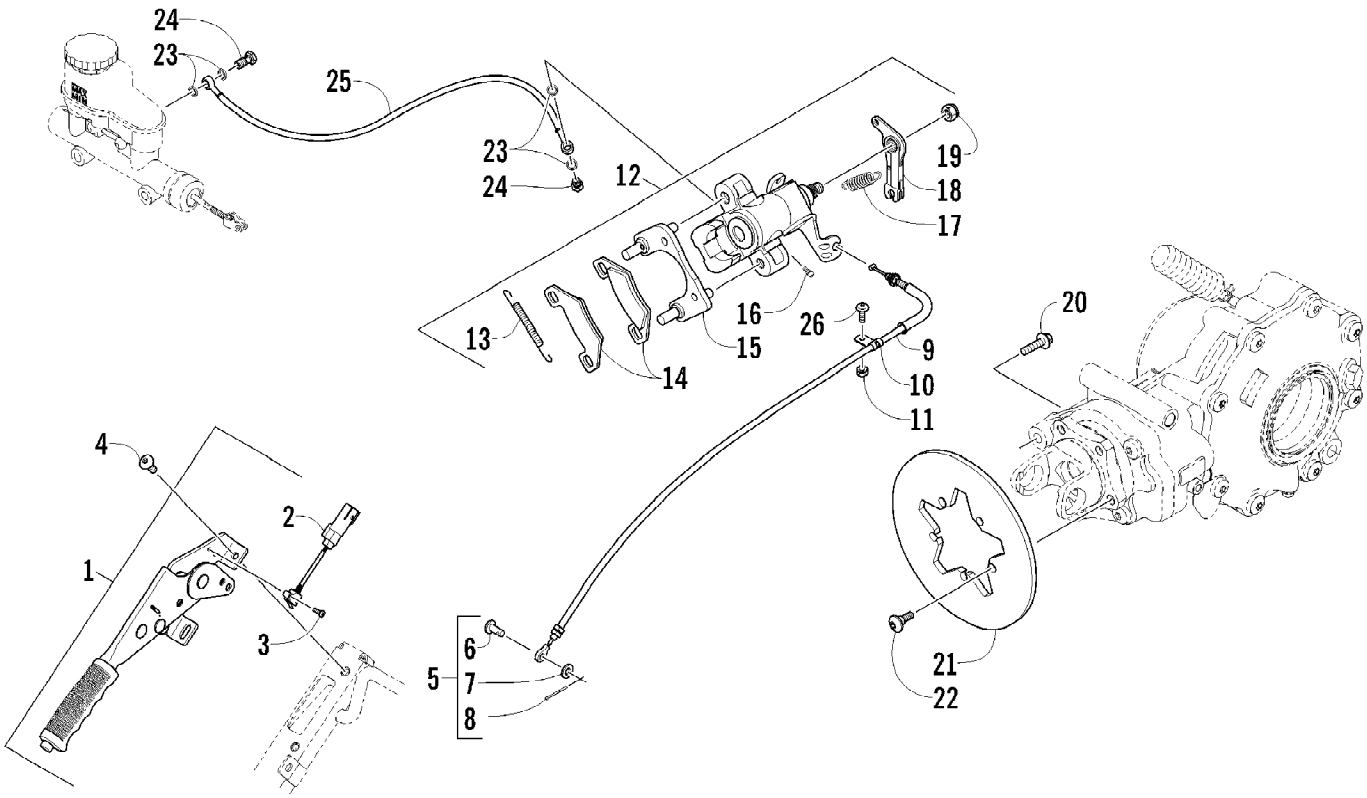

www.mymowerparts.com

For Arctic Cat Discount Parts Call 606-678-9623 or 606-561-4983

REAR AND PARKING BRAKE ASSEMBLY

Ref #	Part Number	Qty	S/P/F	Description
1	1502-497	1		Lever, Parking Brake - Assembly (inc. 2-3)
2	0409-131	1		Switch, Limiter
3	0423-992	1		Screw, Machine
4	8468-820	2		Screw, Machine
5	0423-894	1		Pin, Retaining - Assembly (inc. 6-8)
6	0423-989	1		Pin
7	0423-990	1		Washer
8	0423-991	1		Pin, Cotter
9	0487-068	1		Cable, Parking Brake (inc. 10)
10	0423-923	1		Clamp
11	0623-038	1		Nut w/Washer
12	1502-703	1		Brake - Assembly (inc. 13-19)
13	1502-161	1		Spring, Anti-Rattle
14	1502-694	1	S	Pad, Brake - Set
15	0502-605	1		Bracket Assembly
16	0502-609	1	/P	Valve, Bleed
17	0502-985	1		Spring
18	1502-160	1		Lever, Actuator
19	0502-988	1		Nut
20	8408-836	2		Screw, Cap
21	1402-710	1		Rotor
22	0423-557	5		Screw, Shoulder
23	0423-178	4		Washer, Crush
24	0423-413	2		Bolt, Banjo-Fitting
25	1402-388	1		Hose, Brake
26	8476-616	1		Screw, Machine

www.mymowerparts.com

For Arctic Cat Discount Parts Call 606-678-9623 or 606-561-4983

REAR DRIVE GEARCASE ASSEMBLY

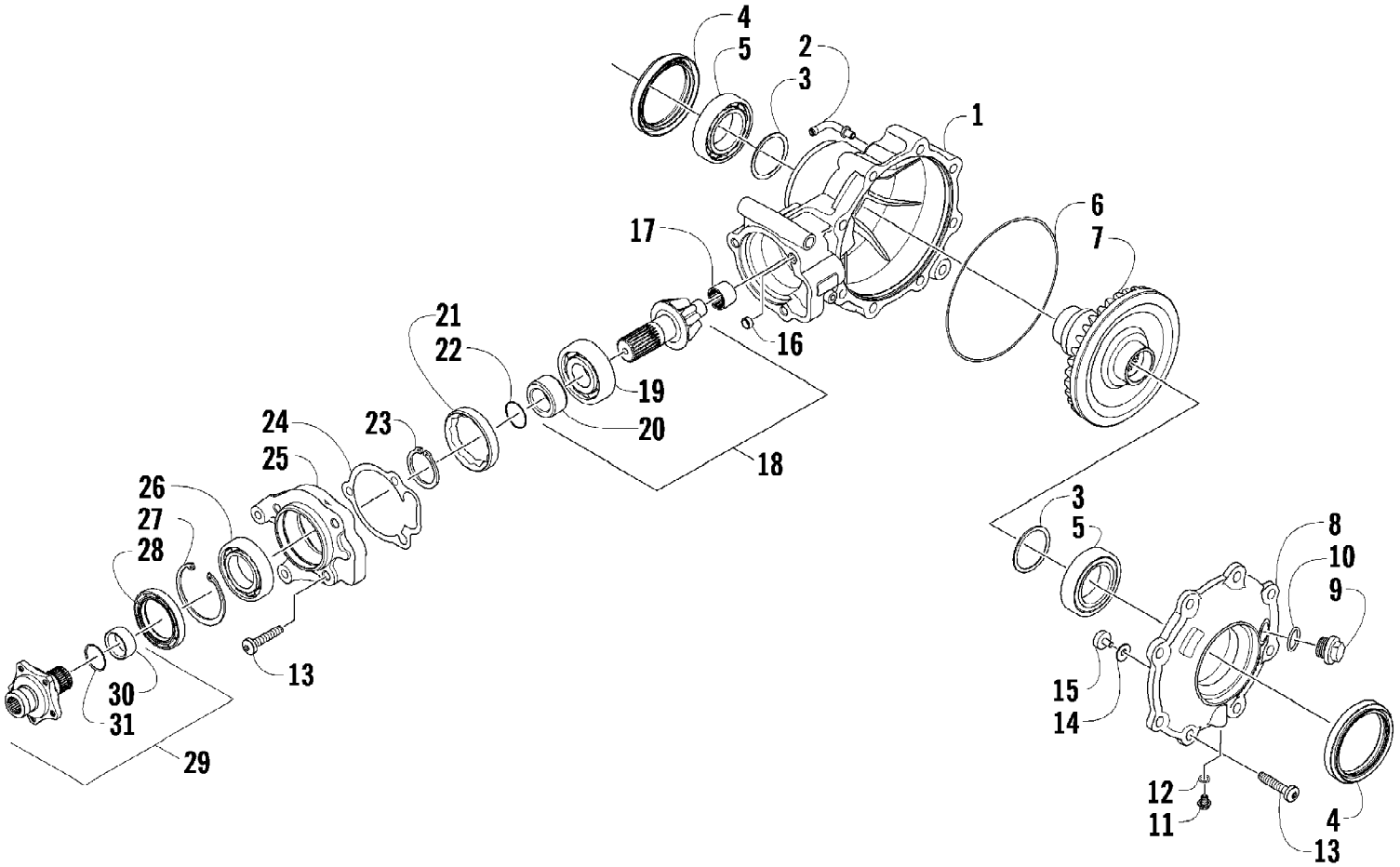

www.mymowerparts.com

For Arctic Cat Discount Parts Call 606-678-9623 or 606-561-4983

REAR DRIVE GEARCASE ASSEMBLY

Ref #	Part Number	Qty	S/P/F	Description
	1502-607	1		Compelte Rear Drive Gearcase Assembly
1	0502-548	1		Housing, Gearcase
2	1402-442	1		Fitting, Elbow
3	0402-405	AR		Shim, 41 x 49 x 1.3 mm
3	0402-406	AR		Shim, 41 x 49 x 1.4 mm
3	0402-407	AR		Shim, 41 x 49 x 1.5 mm
3	0402-408	AR		Shim, 41 x 49 x 1.6 mm
3	0402-409	AR		Shim, 41 x 49 x 1.7 mm
4	1402-713	2	S	Seal
5	0402-393	2		Bearing
6	0423-149	1		O-Ring
7	1402-245	1		Gear, Rear - 36T
8	0502-741	1		Cover, Gearcase
9	0402-333	1	/P	Plug, Fill (inc. 10)
10	0423-154	1		O-Ring
11	1402-210	1	/P	Plug, Magnetic (inc. 12)
12	0423-153	1		O-Ring
13	0423-118	11		Screw, Self-Tapping
14	0402-429	AR		Shim, 6.3 x 18 x 1.3 mm
14	0402-430	AR		Shim, 6.3 x 18 x 1.4 mm
14	0402-431	AR		Shim, 6.3 x 18 x 1.5 mm
14	0402-432	AR		Shim, 6.3 x 18 x 1.6 mm
14	0402-433	AR		Shim, 6.3 x 18 x 1.7 mm
15	0402-326	1		Button, Thrust
16	0402-411	1		Pin, Dowel
17	0402-328	1		Bearing
18	0502-649	1		Gear, Pinion - Assembly - 9T (inc. 19-20)
19	0402-327	1		Bearing
20	0402-336	1		Collar, Retaining
21	0402-357	1		Collar, Lock
22	0423-633	1		O-Ring
23	0423-546	1		Ring, Retaining
24	0402-947	1		Gasket
25	0502-746	1		Housing, Pinion
26	0402-324	1		Bearing
27	0402-347	1		Ring, Retaining
28	1402-314	1		Seal
29	0502-766	1		Shaft, Input - Assembly (inc. 30-31)
30	1402-345	1		Sleeve, Seal
31	0423-547	1		O-Ring

www.mymowerparts.com

For Arctic Cat Discount Parts Call 606-678-9623 or 606-561-4983

REAR SUSPENSION ASSEMBLY

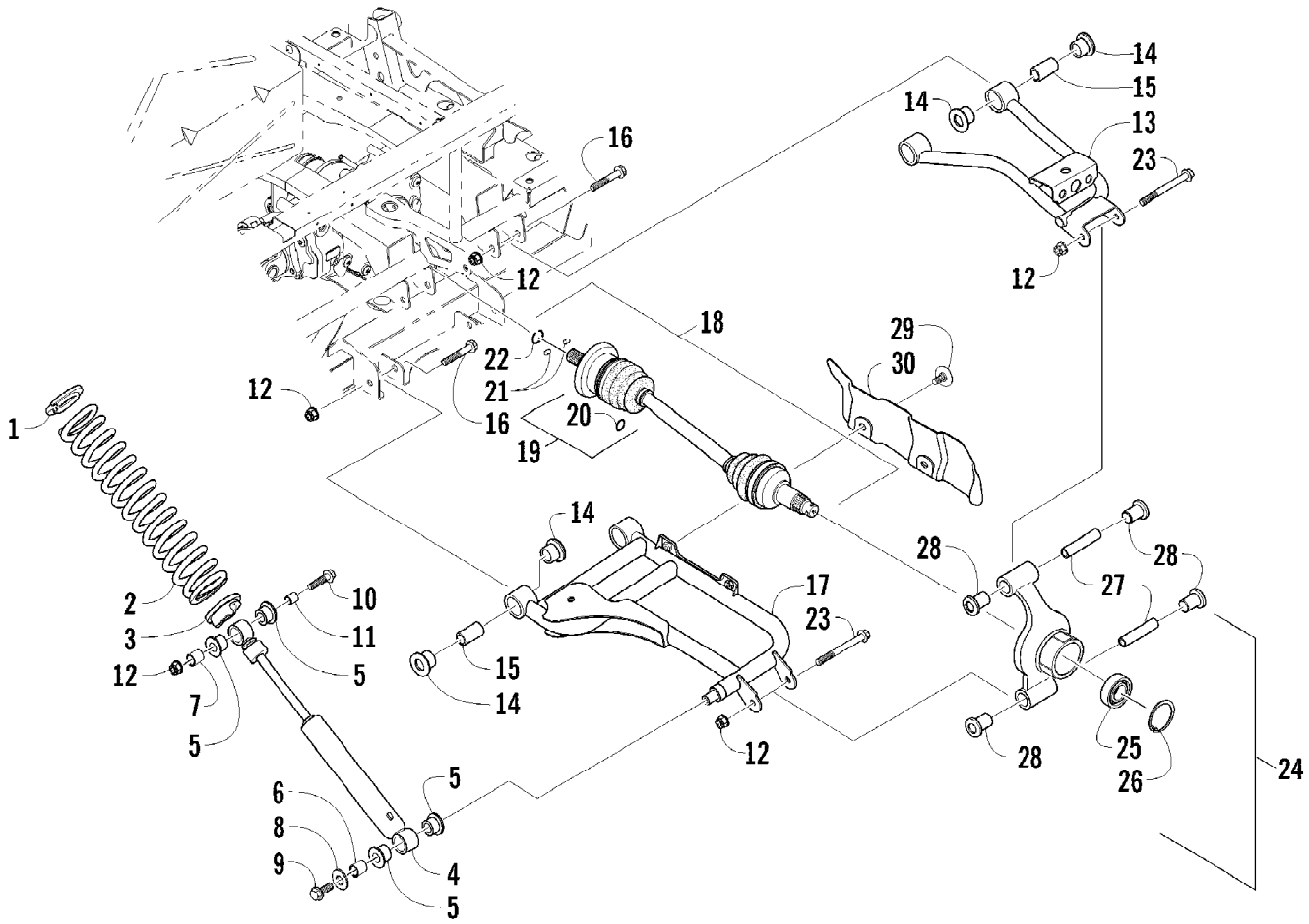

www.mymowerparts.com

For Arctic Cat Discount Parts Call 606-678-9623 or 606-561-4983

REAR SUSPENSION ASSEMBLY

Ref #	Part Number	Qty	S/P/F	Description
1	1603-889	2	/P	Retainer, Spring
2	0404-172	2		Spring, Suspension
3	0404-057	2		Cam, Spring Adjuster
4	0404-115	2		Shock Absorber (inc. 5-7)
5	0603-955	8		Bushing
6	1603-219	2	S	Sleeve
7	1603-209	2		Sleeve
8	0423-087	2		Washer
9	8408-820	2	/P	Screw, Cap
10	8409-040	2		Screw, Cap
11	0404-116	2		Sleeve
12	8428-002	14		Nut, Lock
13	0504-562	1	/P	A-Arm, Rear - Upper Right (inc. 14-15)
13	0504-563	1	/P	A-Arm, Rear - Upper Left (inc. 14-15)
14	0403-208	16	/P	Bushing
15	0403-214	8	/P	Axle
16	8409-075	8		Screw, Cap
17	0504-552	1		A-Arm, Rear - Lower Right (inc. 14-15)
17	0504-553	1	/P	A-Arm, Rear - Lower Left (inc. 14-15)
18	1502-801	2	S	Axle, Drive (inc. 19-22)
19	1436-419	2		Repair Kit, Boot (inc. 20)
20	1441-988	2		Clip, Retaining
21	1402-885	4		Pin, Detent
22	1402-890	2		Clip, Retaining
23	8409-000	4		Screw, Cap
24	0504-613	2		Knuckle, Rear - Assembly (inc. 25-28)
25	1402-809	2	/P	Bearing
26	0423-423	2		Ring, Retaining
27	0403-213	4	/P	Axle
28	0403-206	8	/P	Bushing
29	0423-545	4	/P	Screw, Shoulder
30	1406-068	1		Guard, Boot - Right
30	1406-069	1		Guard, Boot - Left

www.mymowerparts.com

For Arctic Cat Discount Parts Call 606-678-9623 or 606-561-4983

ROPS AND TAILLIGHT ASSEMBLY

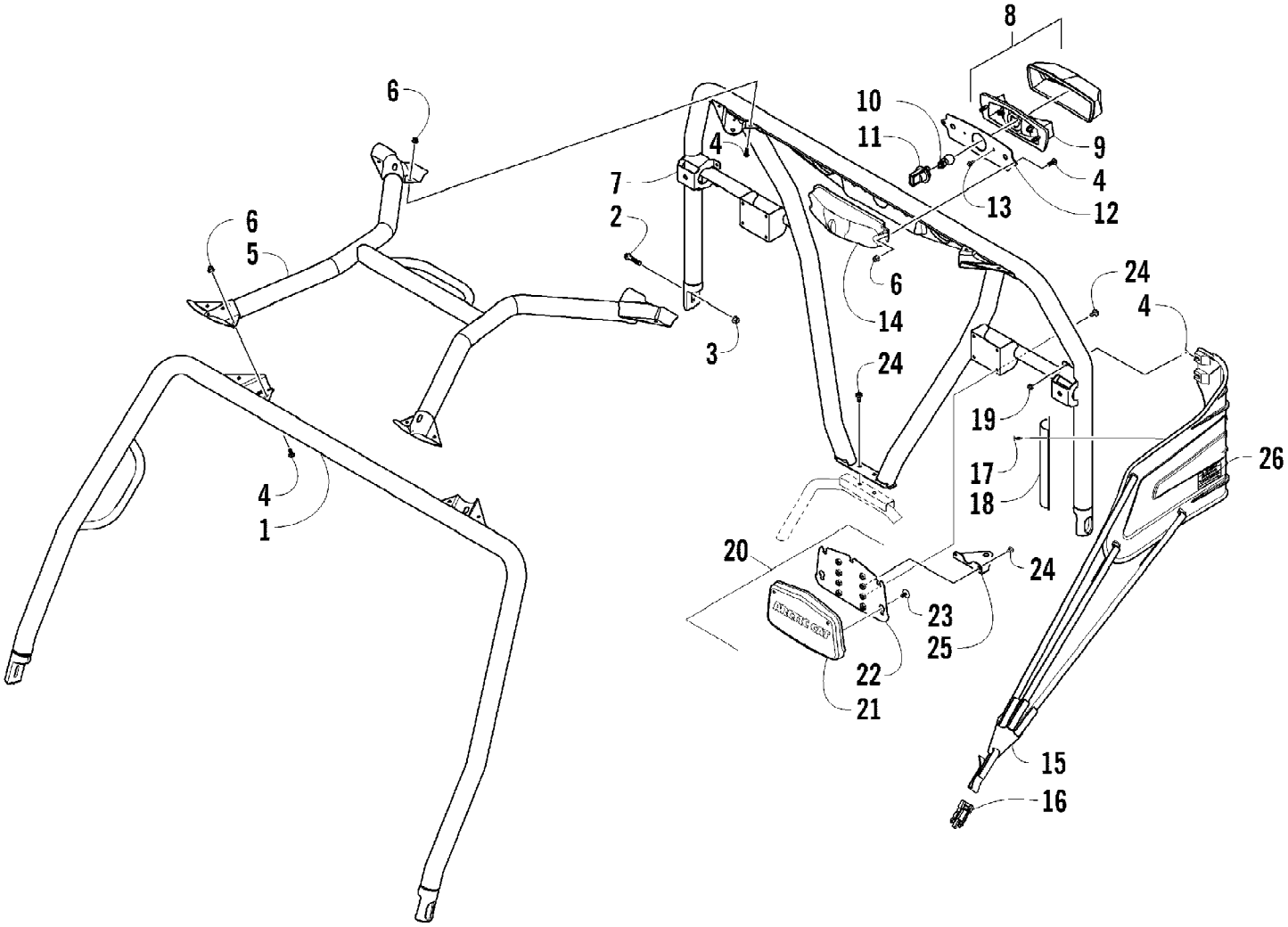

www.mymowerparts.com

For Arctic Cat Discount Parts Call 606-678-9623 or 606-561-4983

ROPS AND TAILLIGHT ASSEMBLY

Ref #	Part Number	Qty	S/P/F	Description
1	2516-653	1		Tube, ROPS - Front
2	8410-835	8		Screw, Cap
3	8432-802	8		Nut, Lock
4	8468-616	14		Screw, Machine
5	2516-658	1		Support, ROPS
6	8427-602	10		Nut, Lock
7	2516-656	1		Tube, ROPS - Rear
8	0509-022	1		Taillight Assembly (inc. 9-11)
9	0509-025	1		Housing, Taillight
10	0409-056	1		Bulb, Taillight
11	0409-057	1		Socket, Taillight
12	2406-069	1		Bracket, Taillight Mounting
13	0623-301	2	/P	Screw, Self-Tapping
14	2516-893	1		Cover, Taillight
15	0517-126	1	S	Restraint, Side - Right (inc. 16)
15	0517-127	1	S	Restraint, Side - Left (inc. 16)
16	2416-644	2	S	Buckle, Retaining
17	0623-784	8		Screw, Self-Tapping
18	4506-149	2		Bracket, Mounting - Side Restraint
19	8424-602	4	/P	Nut
20	1506-795	2		Pad, Headrest - Assembly (inc. 21-23)
21	1406-884	2		Pad, Headrest
22	1506-722	2		Mount, Headrest
23	0623-544	10		Clip, Retaining
24	0423-361	10		Screw, Machine
25	4506-296	1		Bracket, Mounting - Flag
26	2411-522	1		Decal, Warning - ROPS

www.mymowerparts.com

For Arctic Cat Discount Parts Call 606-678-9623 or 606-561-4983

SEAT ASSEMBLY

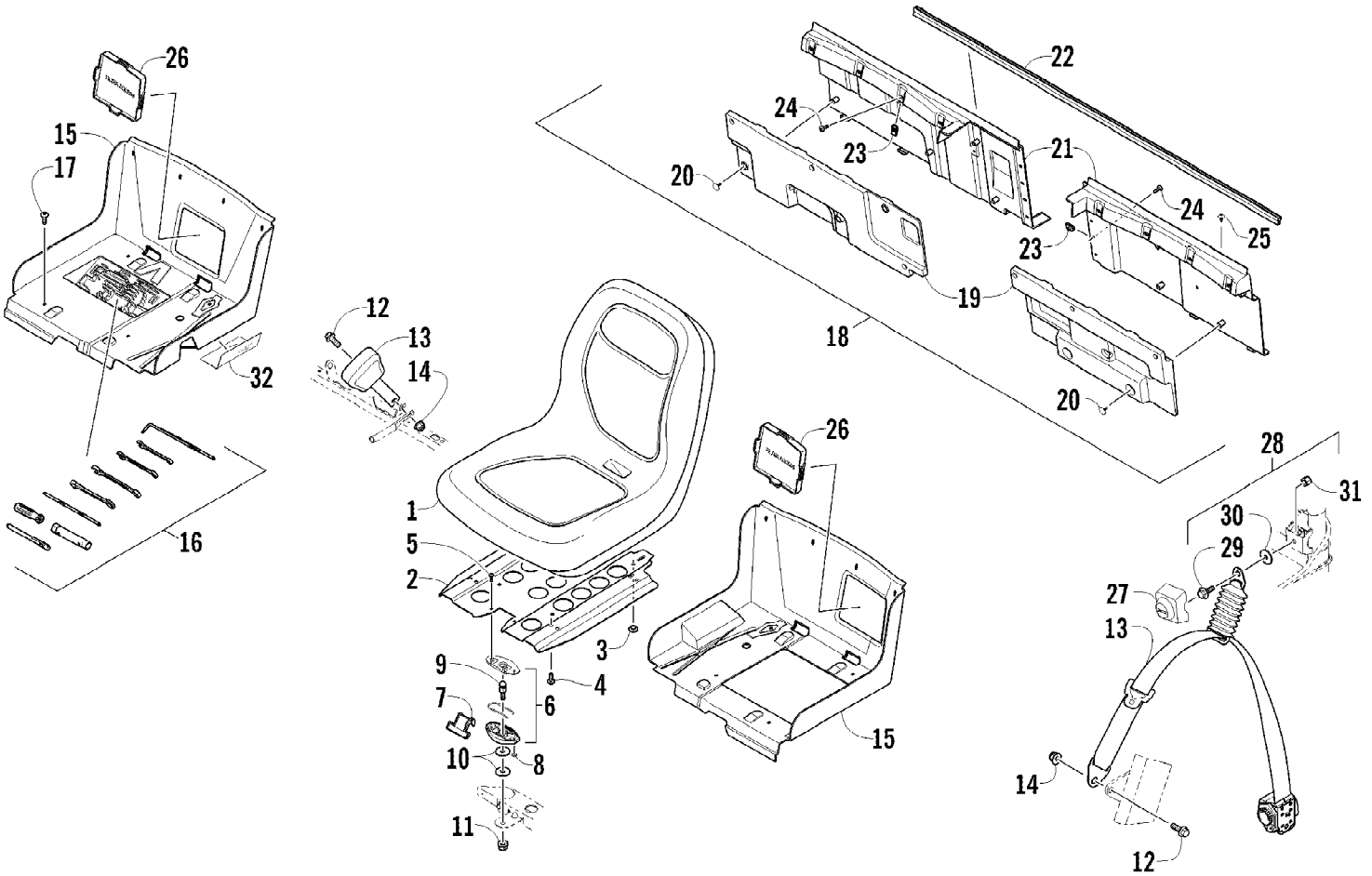

www.mymowerparts.com

For Arctic Cat Discount Parts Call 606-678-9623 or 606-561-4983

SEAT ASSEMBLY

Ref #	Part Number	Qty	S/P/F	Description
1	1506-925	2		Seat, Low-Back
2	2506-780	2	/P	Plate, Base - Seat
3	0406-877	8	/P	Bumper, Seat
4	8468-820	8		Screw, Machine
5	8468-620	4	/P	Screw, Machine
6	2706-164	2	/P	Latch - Assembly (inc. 7)
7	2606-854	2	S	Lever, Release - Seat Latch
8	0623-038	4		Nut w/Washer
9	0423-559	2		Stud, Latch - Seat
10	0423-073	4		Washer
11	8424-002	2		Nut
12	8408-020	6		Screw, Cap
13	2516-325	2		Belt, Seat
14	8427-002	6		Nut, Lock
15	2406-910	1		Base, Seat - Right
15	2406-911	1		Base, Seat - Left
16	0444-122	1	S/P	Tool Kit - Assembly
17	8477-620	8		Screw, Machine
18	2516-094	1		Panel, Seat - Assembly (inc. 19-23 and five No. 24)
19	2516-146	1		Panel, Seat - Front Right
19	2516-147	1		Panel, Seat - Front Left
20	0623-544	11		Clip, Retaining
21	2406-912	1		Panel, Seat - Rear Right
21	2406-913	1		Panel, Seat - Rear Left
22	2406-915	1		Seal, Seat Panel
23	0423-577	5		Clip, U-Nut
24	8476-620	13		Screw, Machine
25	0623-784	2		Screw, Self-Tapping
26	2416-091	2		Cover, Access - Air Filter
27	2416-638	2		Cover, Seat Belt
28	0423-915	2		Screw, Shoulder - Assembly (inc. 29-31)
29	0	2	F	Screw, Shoulder
30	0	2	F	Washer
31	0	2	F	Nut, Lock
32	0412-560	AR	F	Foil, Protective

www.mymowerparts.com

For Arctic Cat Discount Parts Call 606-678-9623 or 606-561-4983

SECONDARY DRIVE ASSEMBLY

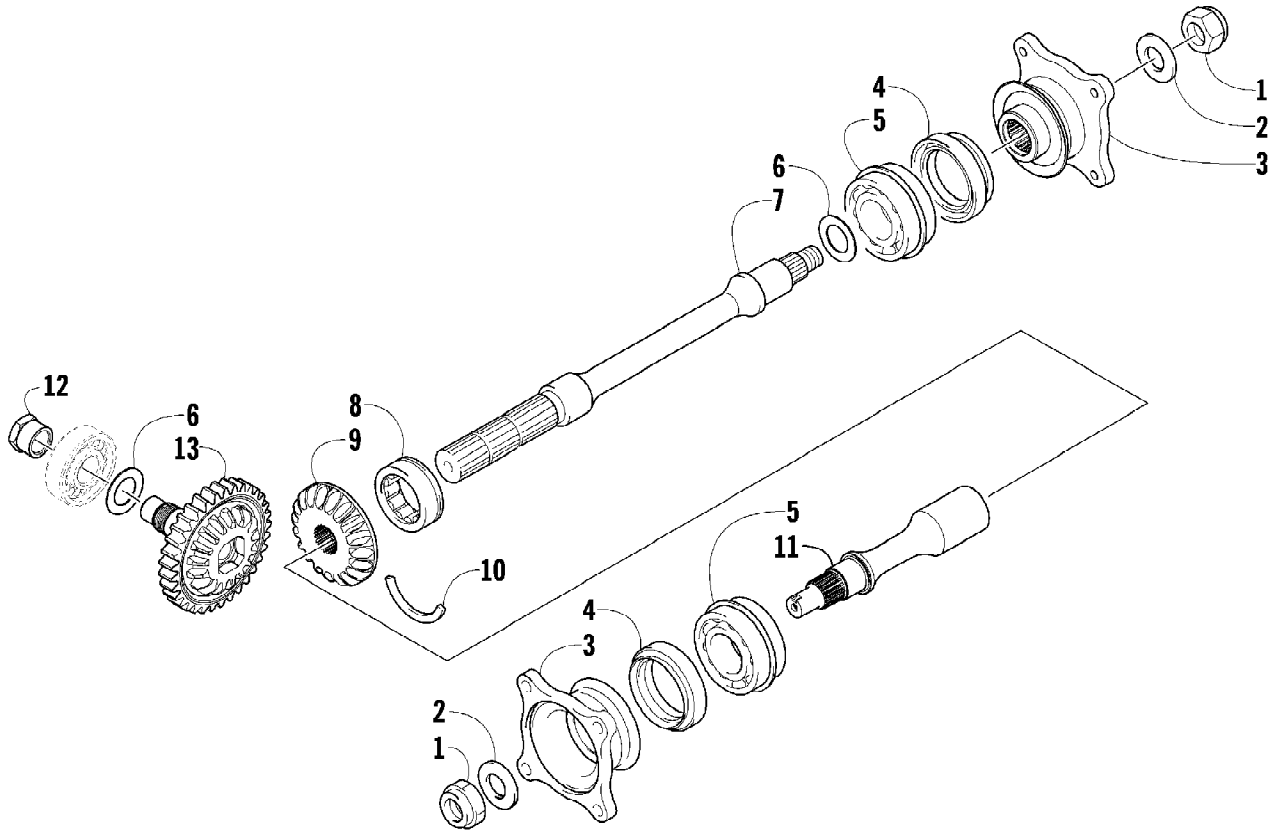

www.mymowerparts.com

For Arctic Cat Discount Parts Call 606-678-9623 or 606-561-4983

SECONDARY DRIVE ASSEMBLY

Ref #	Part Number	Qty	S/P/F	Description
1	0827-013	2		Nut
2	0828-020	2		Washer
3	0819-005	2		Flange, Output Joint
4	0830-043	2		Seal, Oil
5	0832-017	2		Bearing
6	0828-021	AR		Shim, 25 x 34 x 0.25 mm
6	0828-022	AR		Shim, 25 x 34 x 0.30 mm
6	0828-023	AR		Shim, 25 x 34 x 0.70 mm
6	0828-024	AR		Shim, 25 x 34 x 0.90 mm
6	0828-025	AR		Shim, 25 x 34 x 0.95 mm
6	0828-026	AR		Shim, 25 x 34 x 1.00 mm
6	0828-027	AR		Shim, 25 x 34 x 1.05 mm
6	0828-028	AR		Shim, 25 x 34 x 1.10 mm
6	0828-029	AR		Shim, 25 x 34 x 1.15 mm
7	0819-089	1	/P	Shaft, Secondary Driven - Front
8	0832-016	1		Bearing
9	0822-106	1		Gear, Secondary Driven
10	0819-011	1		Ring, Driven Bearing
11	0819-053	1		Shaft, Secondary Driven - Rear
12	0827-052	1		Nut
13	0822-107	1	F	Gear, Secondary Drive
13	0822-131	1	F	Gear, Secondary Drive

www.mymowerparts.com

For Arctic Cat Discount Parts Call 606-678-9623 or 606-561-4983

SECONDARY TRANSMISSION ASSEMBLY (ENGINE SERIAL NO. 60093070 AND UP)

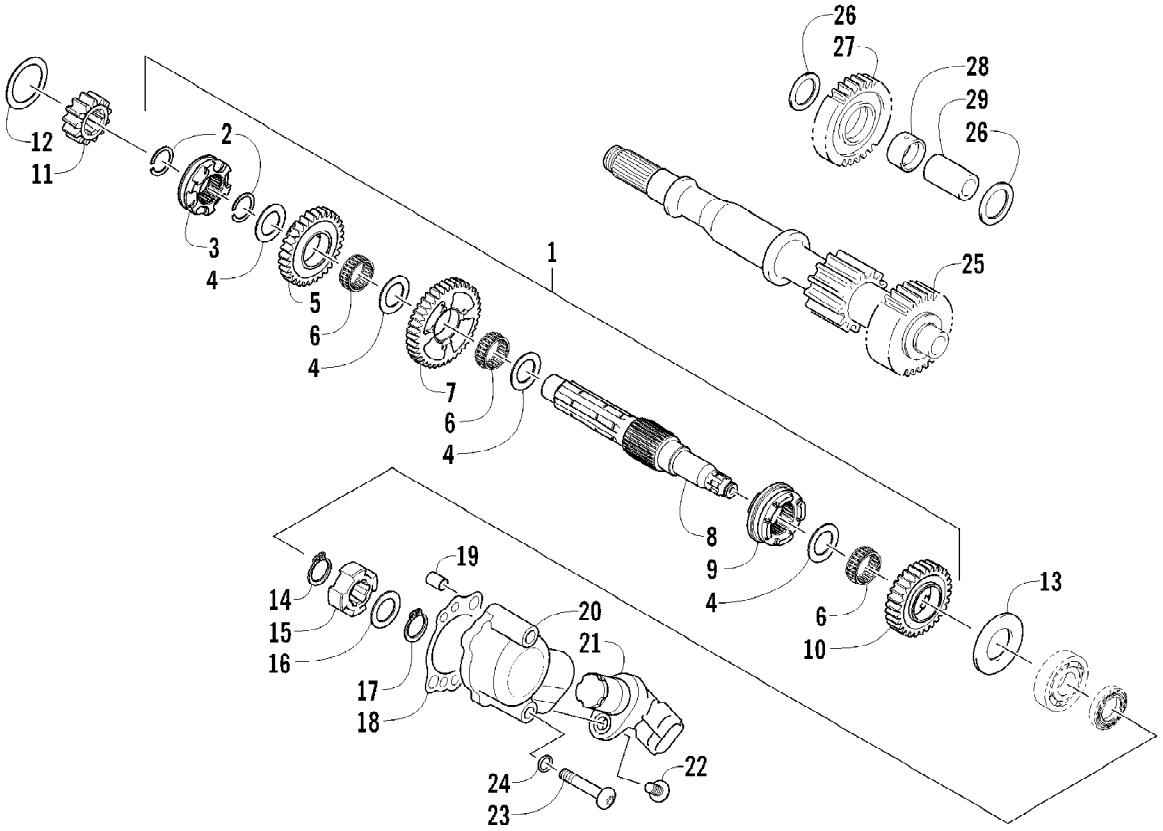

www.mymowerparts.com

For Arctic Cat Discount Parts Call 606-678-9623 or 606-561-4983

SECONDARY TRANSMISSION ASSEMBLY (ENGINE SERIAL NO. 60093070 AND UP)

Ref #	Part Number	Qty	S/P/F	Description
1	0822-124	1		Countershaft Assembly (inc. 2-10)
2	0831-085	2		Ring, Retaining
3	0822-120	1		Gear Select, Reverse
4	0822-121	4		Shim
5	0822-119	1		Gear, Reverse Driven
6	0832-082	3		Bearing
7	0822-114	1		Gear, Driven - Low
8	0822-113	1		Countershaft
9	0822-116	1		Gear Select, Sliding
10	0822-115	1		Gear, Driven - High
11	0822-125	1		Gear, Drive
12	0828-019	1		Washer, Thrust
13	0828-011	1		Washer
14	0831-040	1		Ring, Retaining
15	0822-050	1		Trigger, Speedometer Sensor
16	0828-069	1		Washer, Thrust
17	0831-039	1		Ring, Retaining
18	0830-129	1		Gasket
19	0829-023	2		Pin, Dowel
20	0822-049	1		Housing, Speedometer Sensor
21	0824-042	1	/P	Sensor, Speedometer
22	8468-620	1	/P	Screw, Machine
23	8468-645	2		Screw, Machine
24	0830-107	2		Gasket
25	0822-001	1		Driveshaft
26	0828-016	2		Washer, Thrust
27	0822-011	1		Gear, Reverse Idle
28	0822-012	1		Bushing
29	0822-015	1		Shaft, Reverse Idle

www.mymowerparts.com

For Arctic Cat Discount Parts Call 606-678-9623 or 606-561-4983

SECONDARY TRANSMISSION ASSEMBLY (UP TO ENGINE SERIAL NO. 60093069)

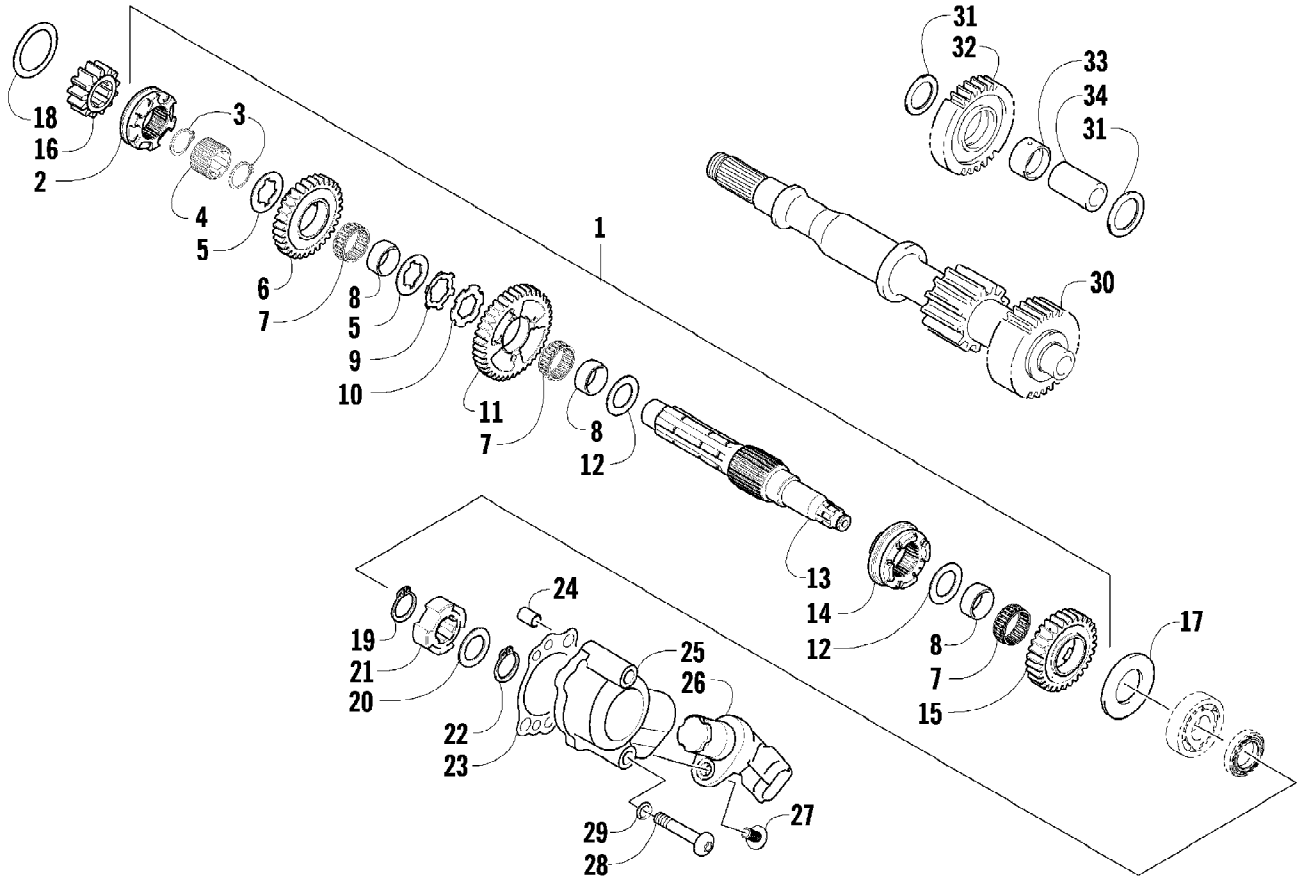

www.mymowerparts.com

For Arctic Cat Discount Parts Call 606-678-9623 or 606-561-4983

SECONDARY TRANSMISSION ASSEMBLY (UP TO ENGINE SERIAL NO. 60093069)

Ref #	Part Number	Qty	S/P/F	Description
1	0822-091	1	/P	Countershaft Assembly (inc. 2-15)
2	0822-014	1		Gear Select, Reverse
3	0831-011	2		Ring, Retaining
4	0822-045	1		Spacer, Reverse Driven Gear
5	0828-008	2		Washer
6	0822-013	1		Gear, Reverse Driven
7	0832-011	3		Bearing
8	0822-005	3		Bushing
9	0828-014	1		Washer, Lock
10	0828-015	1		Washer, Lock
11	0822-004	1		Gear, Driven - Low
12	0822-046	2		Washer, Driven Gear
13	0822-003	1		Countershaft
14	0822-007	1		Gear Select, Sliding
15	0822-006	1		Gear, Driven - High
16	0822-089	1		Gear, Drive
17	0828-011	1		Washer
18	0828-019	1		Washer, Thrust
19	0831-040	1		Ring, Retaining
20	0828-069	1		Washer, Thrust
21	0822-050	1		Trigger, Speedometer Sensor
22	0831-039	1		Ring, Retaining
23	0830-129	1		Gasket
24	0829-023	2		Pin, Dowel
25	0822-049	1		Housing, Speedometer Sensor
26	0824-042	1	/P	Sensor, Speedometer
27	8468-620	1	/P	Screw, Machine
28	8468-645	2		Screw, Machine
29	0830-107	2		Gasket
30	0822-001	1		Driveshaft
31	0828-016	2		Washer, Thrust
32	0822-011	1		Gear, Reverse Idle
33	0822-012	1		Bushing
34	0822-015	1		Shaft, Reverse Idle

www.mymowerparts.com

For Arctic Cat Discount Parts Call 606-678-9623 or 606-561-4983

SHIFTER ASSEMBLY

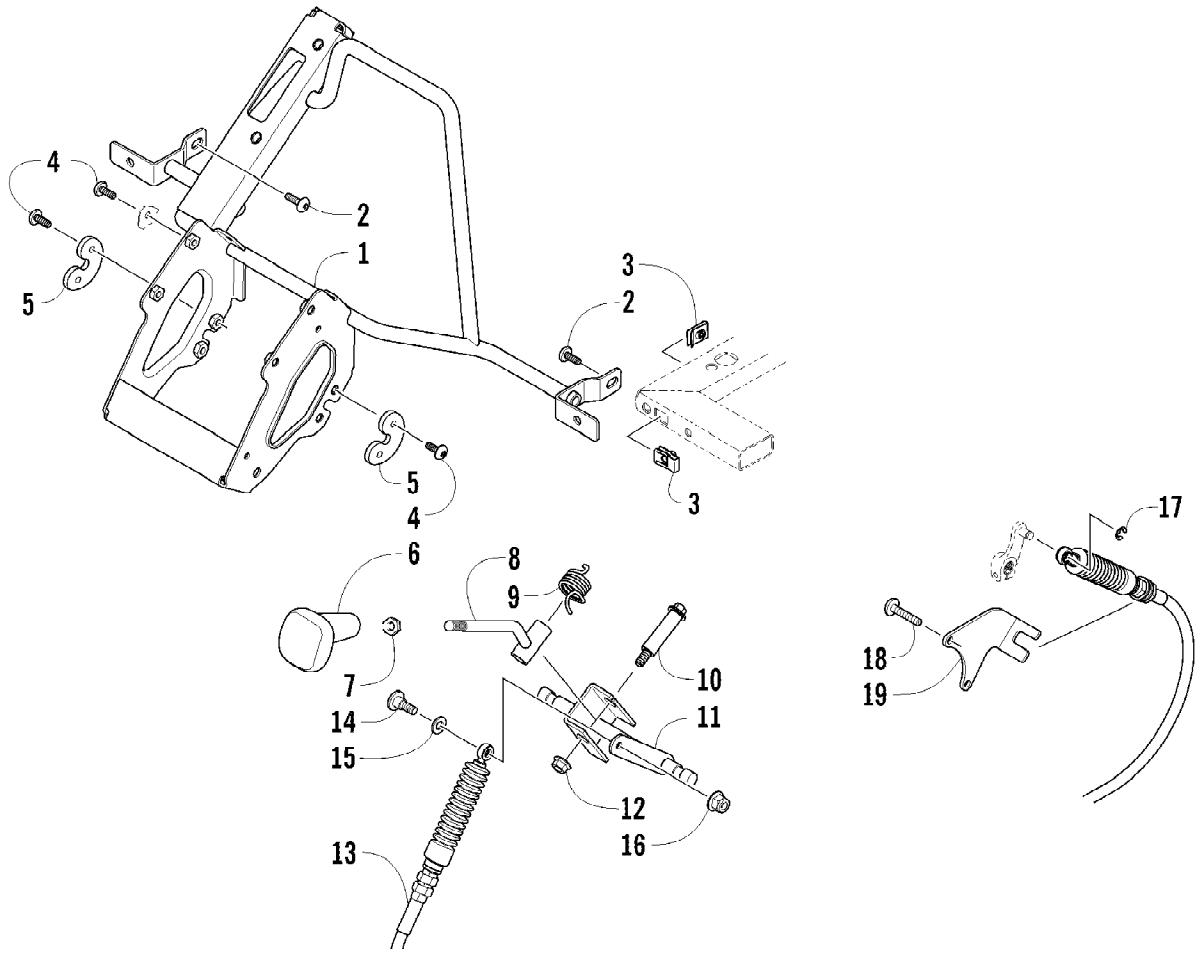

www.mymowerparts.com

For Arctic Cat Discount Parts Call 606-678-9623 or 606-561-4983

SHIFTER ASSEMBLY

Ref #	Part Number	Qty	S/P/F	Description
1	1502-646	1		Mount, Shift
2	8476-620	4		Screw, Machine
3	0423-577	4		Clip, U-Nut
4	8477-616	8		Screw, Machine
5	1402-275	2		Retainer, Shift Linkage
6	1402-758	1		Knob, Shift
7	0423-885	1		Nut
8	1502-510	1		Lever, Shift
9	1402-872	1		Spring
10	0423-505	1		Screw, Shoulder
11	1502-512	1		Axle, Shift
12	8424-802	1		Nut
13	0487-059	1		Cable, Shift
14	0423-356	1		Screw, Shoulder
15	0623-094	1		Washer
16	8427-602	1		Nut, Lock
17	0124-057	1	/P	E-Ring
18	8468-645	2		Screw, Machine
19	2406-894	1	/P	Bracket, Shift Cable

www.mymowerparts.com

For Arctic Cat Discount Parts Call 606-678-9623 or 606-561-4983

STARTER CLUTCH ASSEMBLY

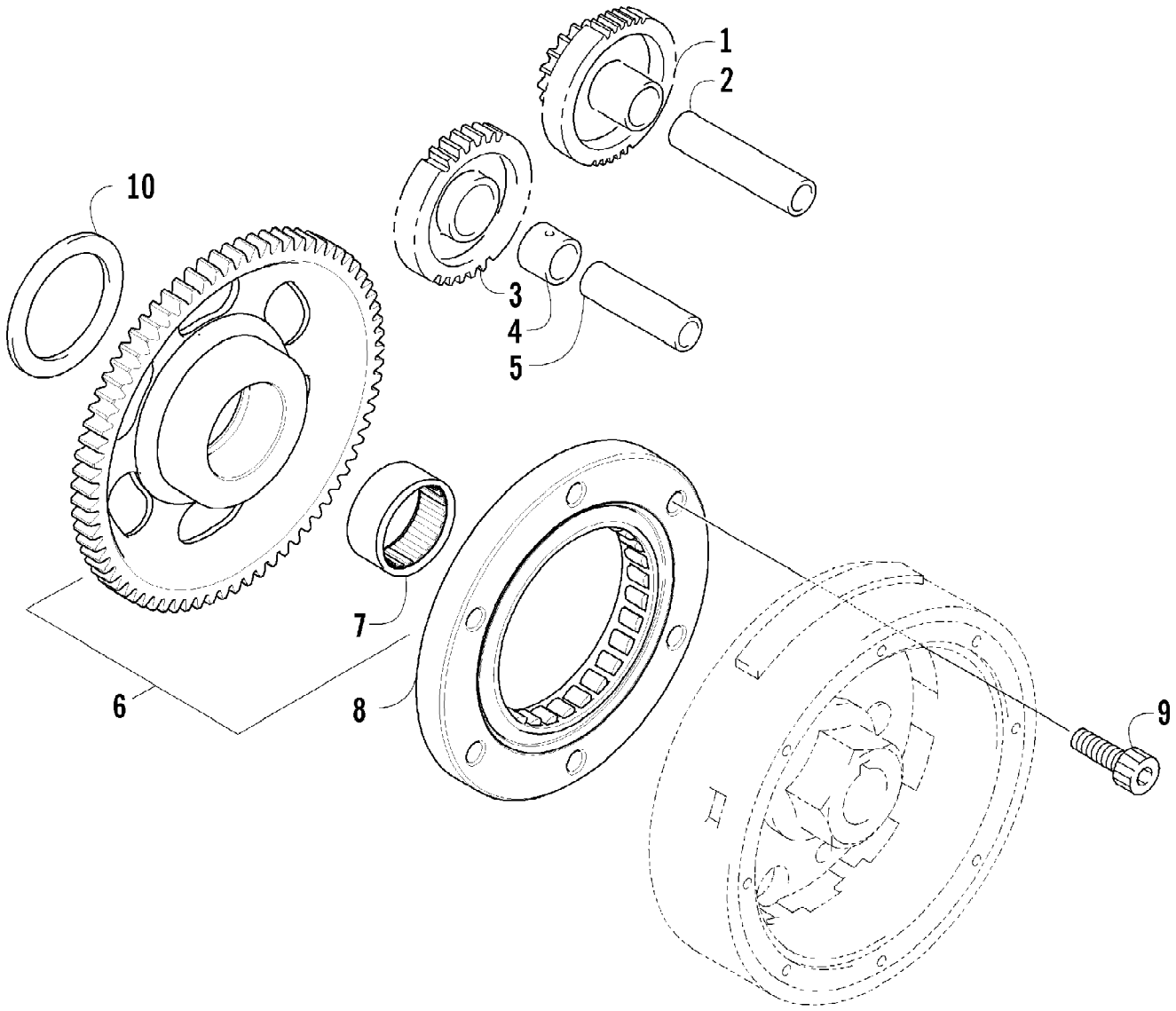

www.mymowerparts.com

For Arctic Cat Discount Parts Call 606-678-9623 or 606-561-4983

STARTER CLUTCH ASSEMBLY

Ref #	Part Number	Qty	S/P/F	Description
1	0815-001	1		Gear, Starter Idler - No. 1
2	0829-031	1	/P	Shaft, Starter Gear
3	0815-002	1		Gear, Starter Idler - No. 2
4	0815-003	1		Spacer, Starter Idler Gear No. 2
5	0829-032	1	/P	Shaft, Starter Gear
6	0815-004	1		Gear, Starter Clutch (inc. 7)
7	0832-079	1	/P	Bearing
8	0802-035	1		Clutch, Starter
9	0826-069	6		Screw, Machine
10	0828-094	1		Washer

www.mymowerparts.com

For Arctic Cat Discount Parts Call 606-678-9623 or 606-561-4983

STEERING ASSEMBLY

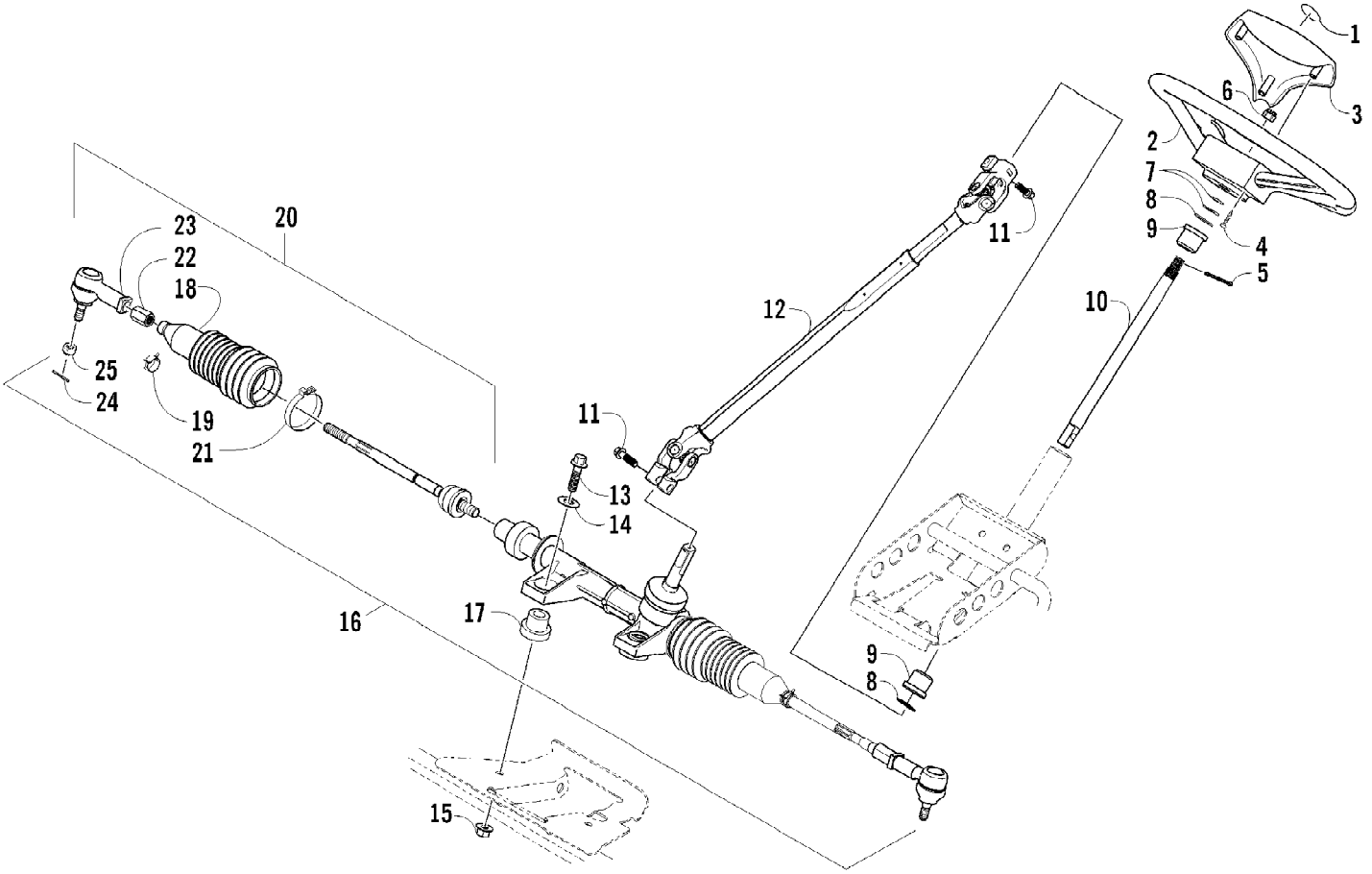

www.mymowerparts.com

For Arctic Cat Discount Parts Call 606-678-9623 or 606-561-4983

STEERING ASSEMBLY

Ref #	Part Number	Qty	S/P/F	Description
1	1411-798	1		Decal, Aircat
2	0502-884	1		Wheel, Steering - Assembly (inc. 3)
3	0405-239	1		Cover, Steering Wheel
4	0423-613	3		Screw, Self-Tapping
5	1602-467	1		Clip, Hairpin
6	0423-884	1		Nut
7	0828-071	2		Washer
8	0423-558	2		Washer
9	0405-155	2		Bushing
10	0405-321	1	/P	Shaft, Upper Steering
11	0423-655	2		Screw, Cap
12	0405-156	1		Shaft, Lower Steering - Assembly
13	8409-050	2		Screw, Cap
14	0623-728	2		Washer
15	8424-002	2		Nut
16	0505-650	1	/P	Housing, Rack and Pinion (inc. 17-24)
17	0405-238	2		Bushing
18	0405-216	2		Boot
19	0405-236	2		Clamp
20	0505-638	2	/P	Tie Rod - Assembly (inc. 21-24)
21	0405-237	2		Clamp
22	0505-640	2	/P	Nut
23	0505-639	2	S	End, Tie Rod (inc. 24)
24	0623-175	2		Pin, Cotter
25	0423-072	2		Nut

www.mymowerparts.com

For Arctic Cat Discount Parts Call 606-678-9623 or 606-561-4983

SWAY BAR ASSEMBLY

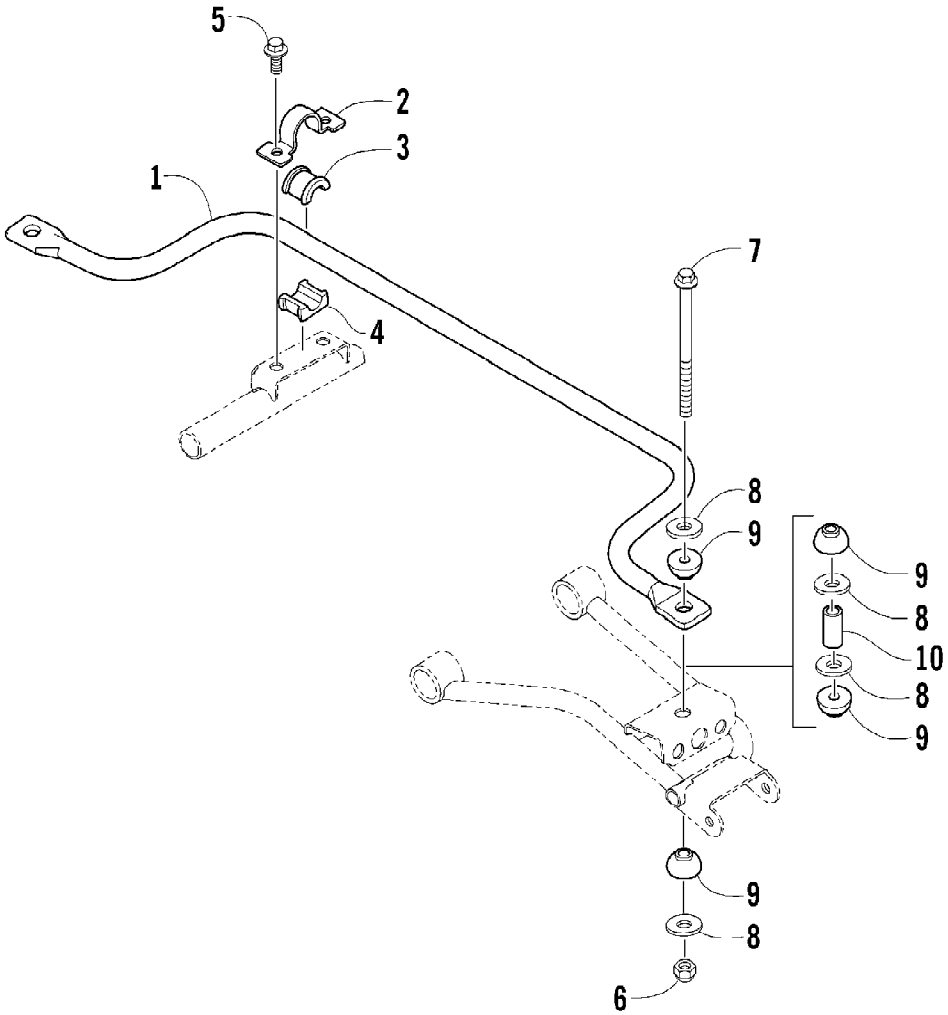

www.mymowerparts.com

For Arctic Cat Discount Parts Call 606-678-9623 or 606-561-4983

SWAY BAR ASSEMBLY

Ref #	Part Number	Qty	S/P/F	Description
1	0404-110	1		Bar, Sway - Assembly
2	0404-135	2		Clamp, Bushing
3	0404-094	2		Bushing, Upper
4	0404-095	2		Bushing, Lower
5	8409-016	4		Screw, Cap
6	8422-002	2		Nut, Lock
7	0423-335	2		Screw, Cap
8	0423-073	8		Washer
9	1402-434	8		Bushing
10	0423-620	2		Spacer

www.mymowerparts.com

For Arctic Cat Discount Parts Call 606-678-9623 or 606-561-4983

THROTTLE BODY ASSEMBLY

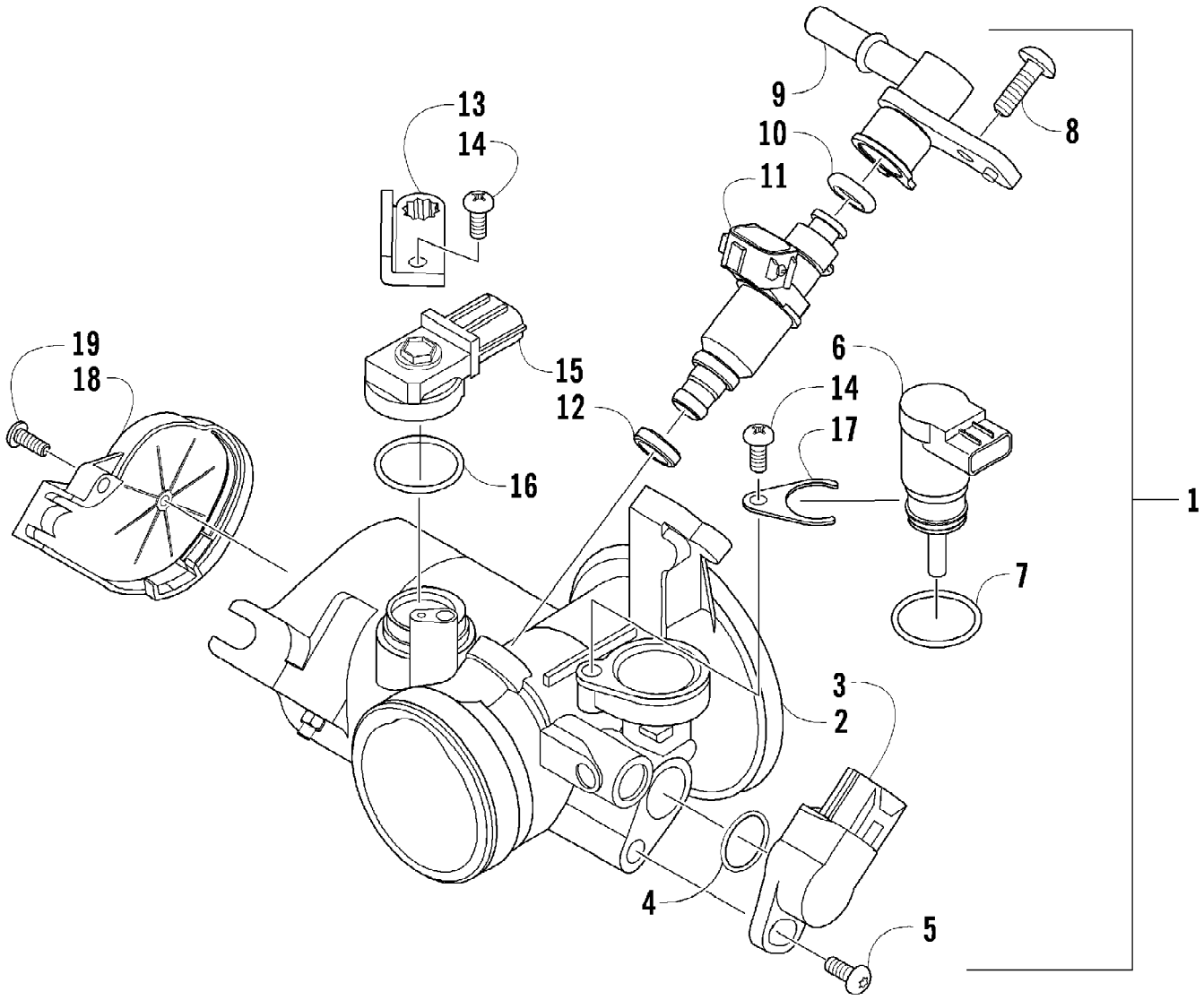

www.mymowerparts.com

For Arctic Cat Discount Parts Call 606-678-9623 or 606-561-4983

THROTTLE BODY ASSEMBLY

Ref #	Part Number	Qty	S/P/F	Description
1	0470-753	1		Throttle Body - Assembly (inc. 2-19)
2	0	1	F	Throttle Body
3	0430-072	1		Sensor, Throttle Position
4	5507-234	1		O-Ring, Throttle Position Sensor
5	5507-231	1		Screw, Machine
6	0430-074	1		Valve, ISC
7	5507-233	1		O-Ring, ISC Valve
8	5507-238	1		Screw, Machine
9	0470-687	1		Rail, Fuel
10	0470-767	1		O-Ring, Fuel Injector
11	0470-762	1		Injector, Fuel
12	0470-768	1		Seal, Fuel Injector
13	5507-227	1		Bracket, MAP Sensor
14	5507-117	2	/P	Screw, Machine
15	0430-073	1		Sensor, MAP
16	5507-232	1		O-Ring, MAP Sensor
17	5507-229	1		Plate, Retaining
18	5507-223	1		Cover
19	5507-037	1	/P	Screw, Machine

www.mymowerparts.com

For Arctic Cat Discount Parts Call 606-678-9623 or 606-561-4983

TILT FRAME ASSEMBLY

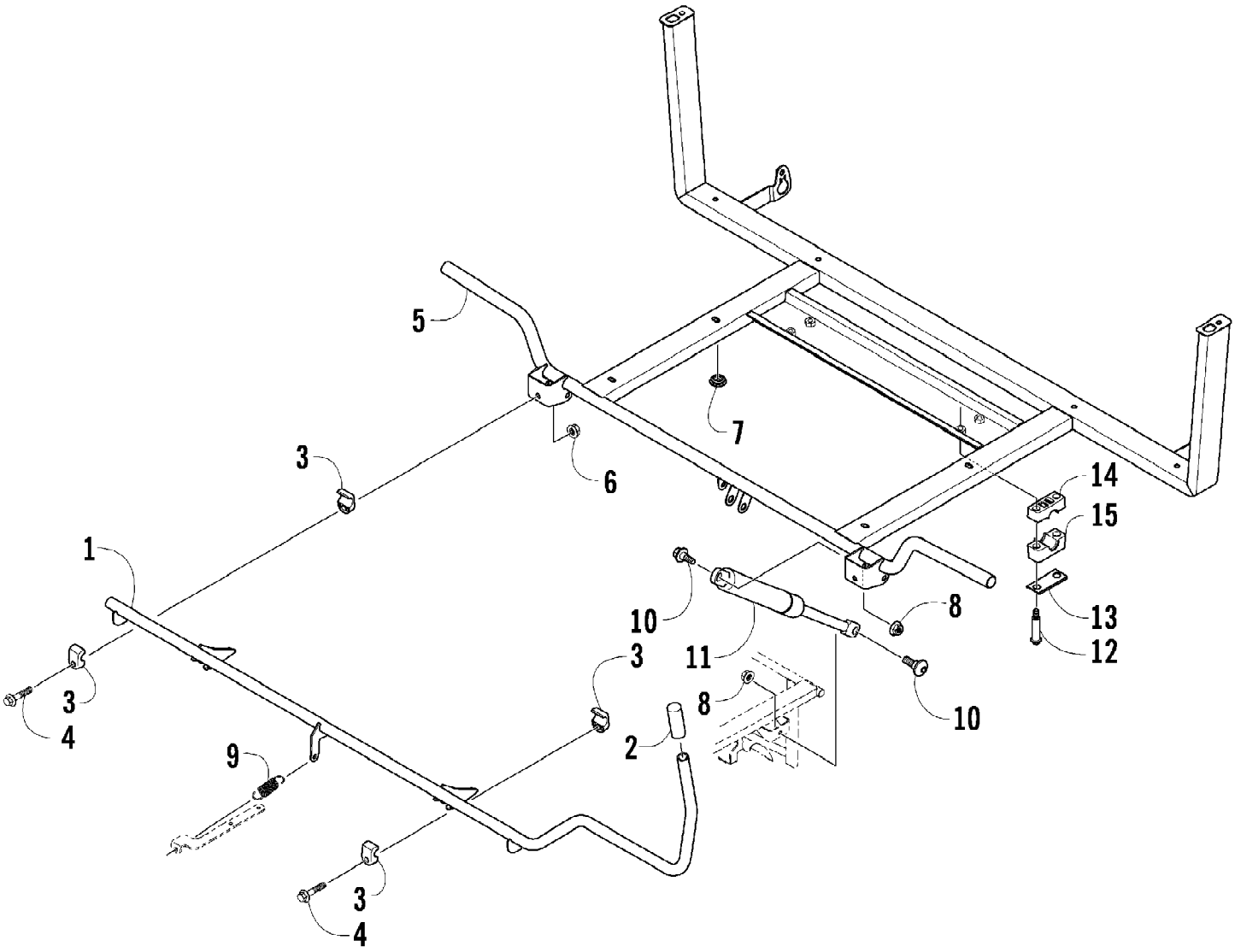

www.mymowerparts.com

For Arctic Cat Discount Parts Call 606-678-9623 or 606-561-4983

TILT FRAME ASSEMBLY

Ref #	Part Number	Qty	S/P/F	Description
1	2506-919	1		Rod, Cargo Box Latch
2	1406-736	1		Grip, Latch Rod
3	1406-674	4		Bushing, Pivot
4	8408-840	2		Screw, Cap
5	2506-197	1	/P	Frame, Box
6	8424-802	2		Nut
7	0423-628	4		Grommet
8	8427-602	2		Nut, Lock
9	2416-086	1		Spring
10	0423-356	2		Screw, Shoulder
11	2506-194	1		Support, Lift
12	0423-505	4		Screw, Shoulder
13	0405-166	2		Cap, Housing
14	0405-138	2		Housing, Lower
15	0405-139	2		Housing, Upper

www.mymowerparts.com

For Arctic Cat Discount Parts Call 606-678-9623 or 606-561-4983

TRANSMISSION ASSEMBLY

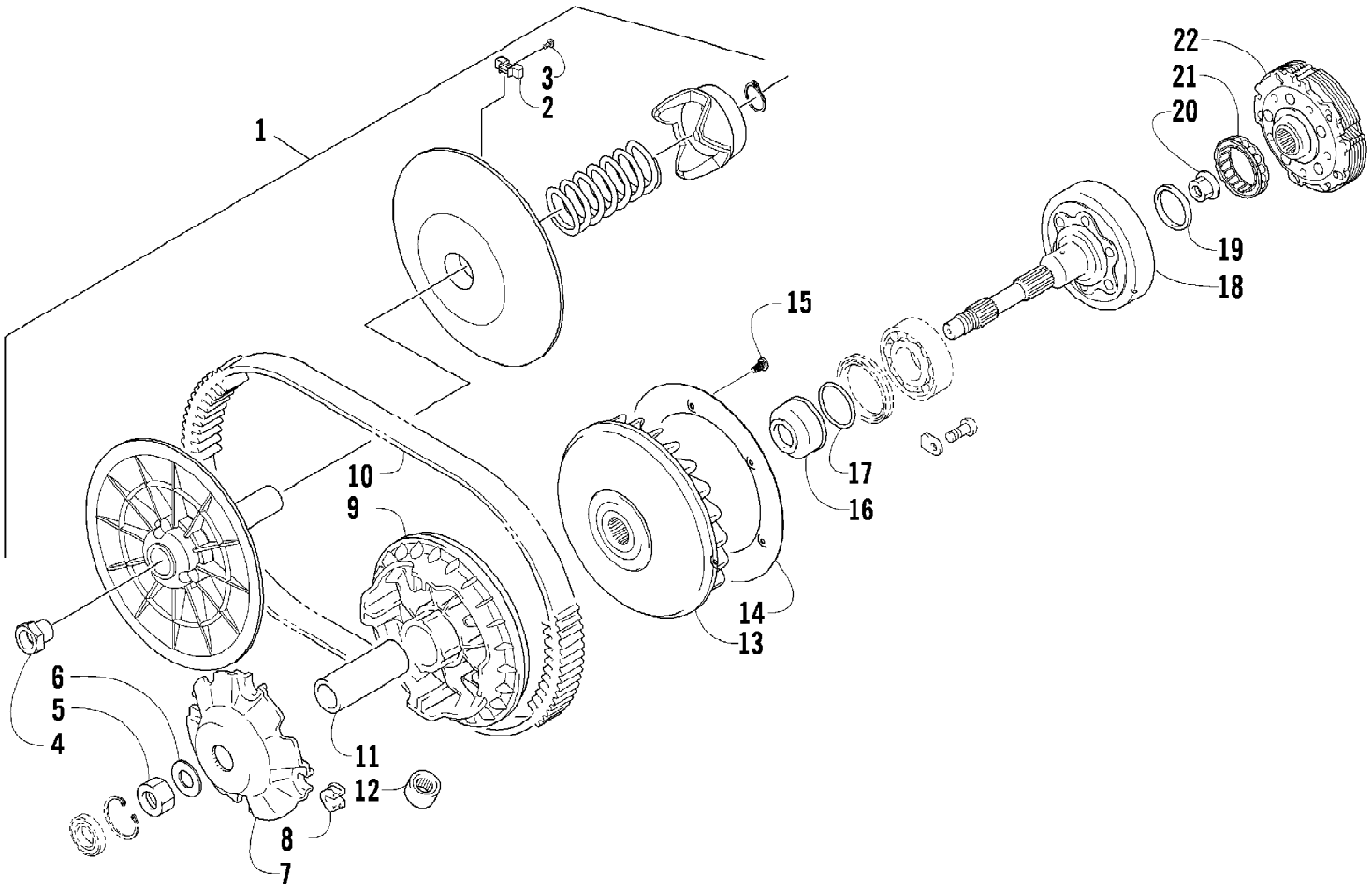

www.mymowerparts.com

For Arctic Cat Discount Parts Call 606-678-9623 or 606-561-4983

TRANSMISSION ASSEMBLY

Ref #	Part Number	Qty	S/P/F	Description
1	0823-254	1	S	Pulley, Driven - Assembly (inc. 2-4)
2	0823-176	3	/P	Shoe, Cam
3	0823-177	3		Screw, Machine
4	0823-178	1		Nut
5	0827-010	1		Nut
6	0828-106	1		Washer
7	0823-008	1		Plate, Movable Drive Face
8	0823-010	4		Damper, Movable Drive Face
9	0823-159	1		Face, Movable Drive
10	0823-013	1		Belt, Drive
11	0823-149	1		Spacer
12	0823-164	8		Roller
13	0823-156	1	/P	Face, Fixed Drive
14	0823-131	1		Shroud, Drive Face
15	0623-914	6		Screw, Self-Tapping
16	0823-015	1		Spacer, Fixed Drive Face
17	0470-531	1		O-Ring
18	0823-261	1	S/P	Housing, Clutch - Assembly
19	0830-189	1	/P	Seal
20	0827-011	1		Nut
21	0823-018	1		Clutch, One-Way
22	0823-310	1	/P	Clutch, Centrifugal - 6 Plate

www.mymowerparts.com

For Arctic Cat Discount Parts Call 606-678-9623 or 606-561-4983

WATER PUMP ASSEMBLY

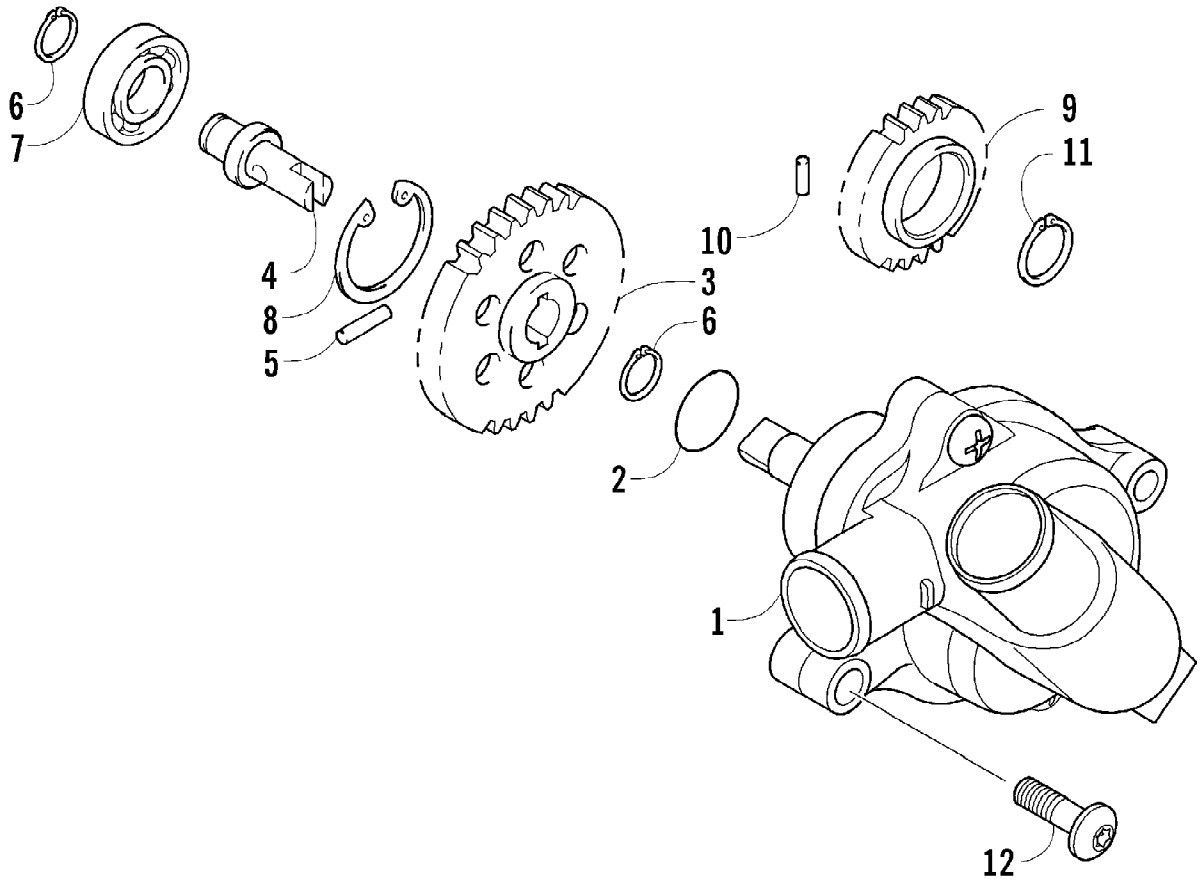

www.mymowerparts.com

For Arctic Cat Discount Parts Call 606-678-9623 or 606-561-4983

WATER PUMP ASSEMBLY

Ref #	Part Number	Qty	S/P/F	Description
1	0813-001	1		Pump, Water - Assembly (inc. 2)
2	0830-029	1		O-Ring
3	0813-004	1		Gear, Driven
4	0813-005	1		Shaft, Driven Gear
5	0829-009	1		Pin
6	0831-002	2		Ring, Retaining
7	0832-046	1	/P	Bearing
8	0831-004	1		Ring, Retaining
9	0811-003	1		Gear, Water Pump Drive
10	0829-007	1		Pin
11	0831-005	1		Ring, Retaining
12	8468-665	2		Screw, Machine

www.mymowerparts.com

For Arctic Cat Discount Parts Call 606-678-9623 or 606-561-4983

WHEEL AND TIRE ASSEMBLY

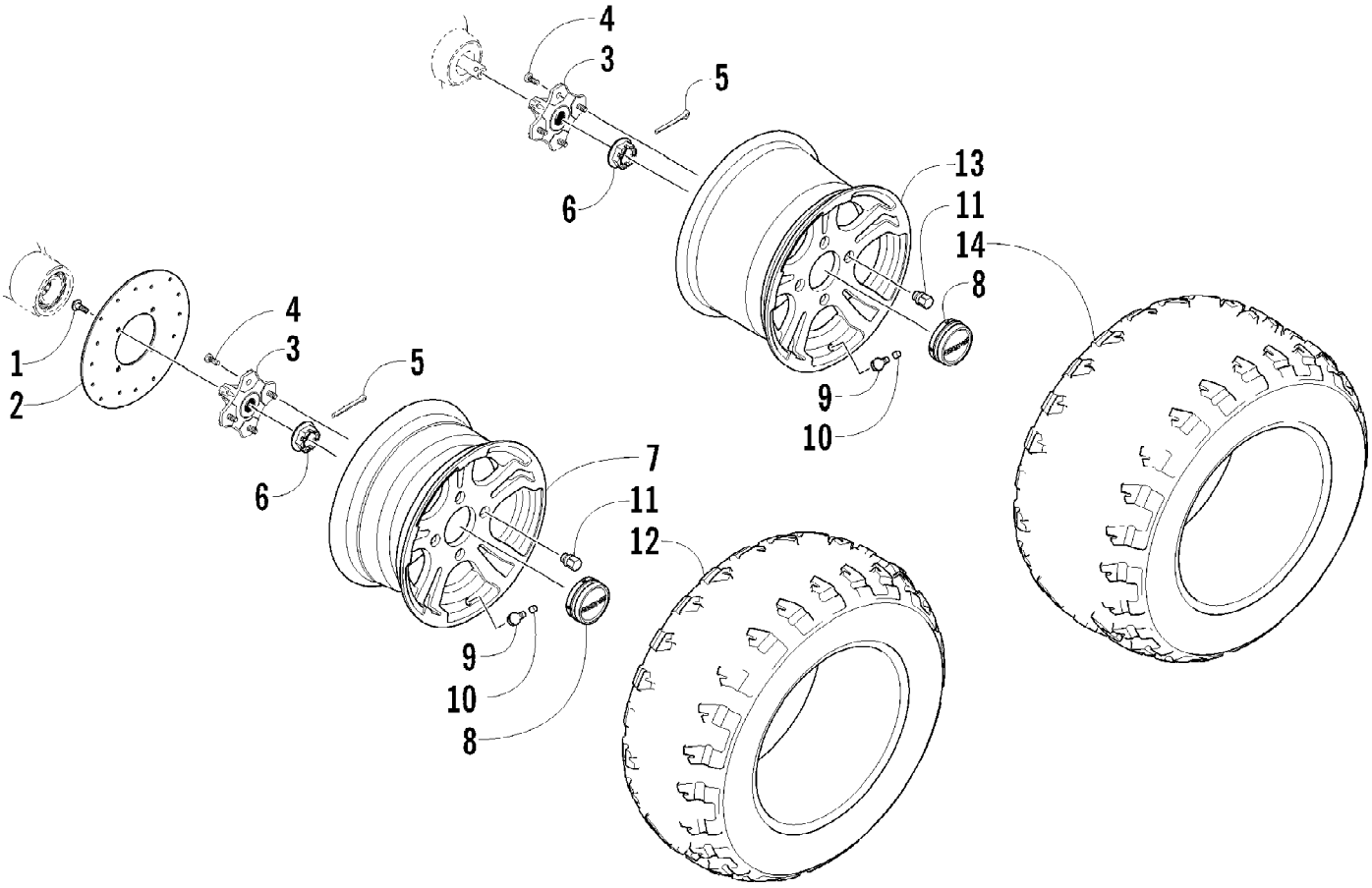

www.mymowerparts.com

For Arctic Cat Discount Parts Call 606-678-9623 or 606-561-4983

WHEEL AND TIRE ASSEMBLY

Ref #	Part Number	Qty	S/P/F	Description
1	0423-557	8		Screw, Shoulder
2	1402-455	2	S	Disc, Brake
3	1502-433	2	/P	Hub, Wheel - Front (inc. 4)
3	1502-435	2	/P	Hub, Wheel - Rear (inc. 4)
4	0402-974	16	/P	Stud
5	0423-407	4		Pin, Cotter
6	0423-607	4		Nut, Castle
7	1402-732	2		Wheel - Front (inc. 8)
8	1402-736	4		Cap, Wheel
9	0402-064	4		Stem, Valve (inc. 10)
10	0402-140	4		Cap, Valve Stem
11	0423-618	16		Nut, Lug
12	1402-860	2		Tire - Front
13	1402-733	2	S	Wheel - Rear (inc. 8)
14	1402-861	2		Tire - Rear

www.mymowerparts.com

For Arctic Cat Discount Parts Call 606-678-9623 or 606-561-4983

WIRING HARNESS ASSEMBLY

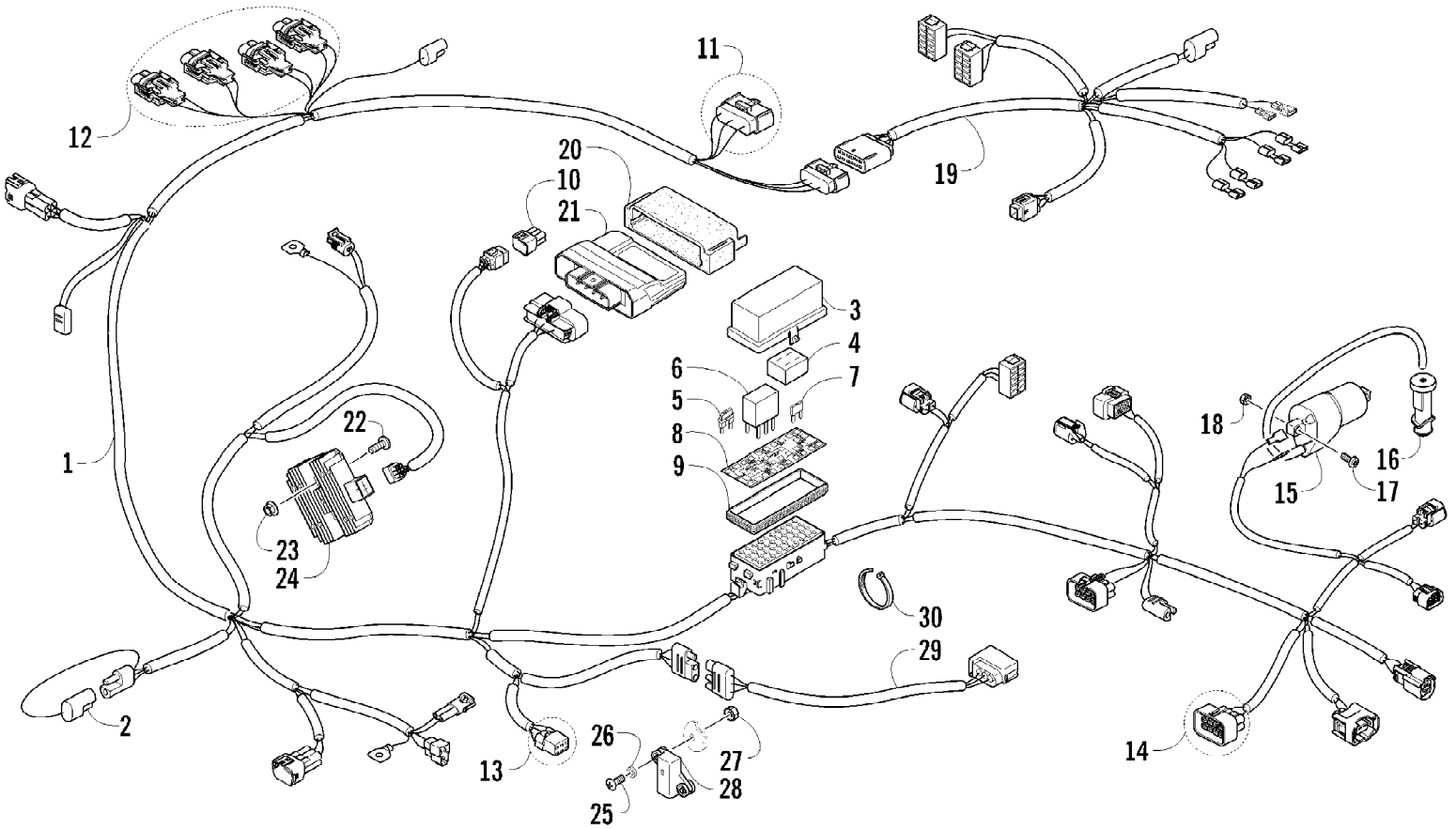

www.mymowerparts.com

For Arctic Cat Discount Parts Call 606-678-9623 or 606-561-4983

WIRING HARNESS ASSEMBLY

Ref #	Part Number	Qty	S/P/F	Description
1	0486-296	1		Harness, Main (inc. 2-10)
2	0486-164	1		Tether, Accessory Connector
3	0430-085	1		Cover, Fuse Block
4	0430-037	1		Holder, Fuse
5	0430-034	1		Diode
6	0430-045	5	/P	Relay (4-Pin) - 20 Amp
7	0430-032	5		Fuse - 10 Amp
7	0430-031	4		Fuse - 15 Amp
7	0430-030	2		Fuse - 30 Amp
8	2411-080	1		Decal, Fuse Block
9	0430-086	1		Seal
10	0430-097	1		Cover, Diagnostics Connector
11	1436-415	1		Repair Kit, Connector - LCD Gauge
12	1436-290	AR		Repair Kit, Connector - Headlight
13	1436-416	1		Repair Kit, Connector - Tilt Sensor
14	1436-417	1		Repair Kit, Connector - Idle Speed Control
15	0824-043	1		Coil, Ignition - Assembly
16	0824-049	1	/P	Cap, Spark Plug
17	8476-620	2		Screw, Machine
18	0623-038	2		Nut w/Washer
19	0486-399	1		Harness, Console
20	0430-076	1		Cushion, ECU
21	0530-056	1		ECU
22	8476-625	2		Screw, Machine
23	8424-602	2	/P	Nut
24	0824-037	1	/P	Regulator, Voltage
25	8468-425	2		Screw, Machine
26	0123-802	2		Washer
27	0423-493	2		Nut w/Washer
28	0409-064	1		Sensor, Tilt
29	0486-403	1		Harness, Adapter - Taillight
30	0123-788	AR	/P	Tie, Cable - 8 in.
30	0123-903	AR		Tie, Cable - 11.5 in.

www.mymowerparts.com