For Discount Tecumseh Engine Parts Call 606-678-9623 or 606-561-4983

Engine Parts List #1

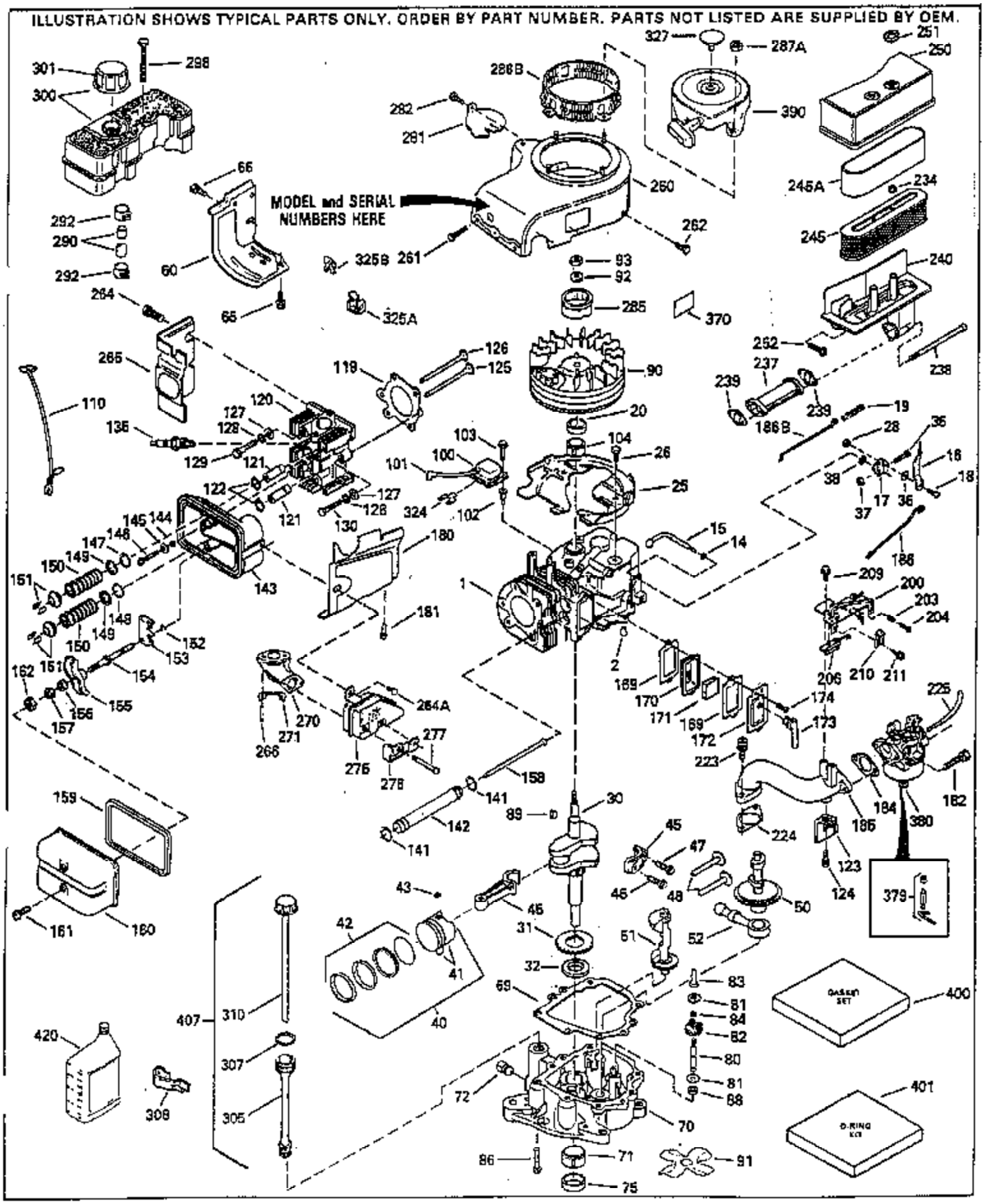

www.mymowerparts.com

For Discount Tecumseh Engine Parts Call 606-678-9623 or 606-561-4983

Ref #	Part Number	Qty	Description
1	35323	1	Cylinder (Incl. Nos. 2 & 20)
2	27652	2	Dowel Pin
14	28277	1	Flat Washer
15	35324	1	Governor Rod
16	32651	1	Governor Lever
17	29916	1	Governor Lever Clamp
18	650548	1	Screw, Hex Washer Hd., 8-32 x 5/16
19	35203	1	Control Spring
20	35319	1	Oil Seal
25	35326	1	Blower Housing Baffle
26	650561		Screw, Hex Washer Hd. Durlock, 1/4- 20 x 5/8
30	35336	1	Crankshaft
31	35327	1	Counter-Balance Gear
35	29826	1	Governor Lever Screw
36	29918	1	E.T. Lock Washer
37	29216	1	Lock Nut
38	31919	2	Piston Pin Retaining Ring
38	29642	1	Retaining Ring
39	30322	1	Keps Nut & Washer
40	35339	1	Piston, Pin & Ring Set (Std.) (Incl. 41, 42 & 43)
40	35340	1	Piston, Pin & Ring Set (.010" Over- Sized (Incl. Nos. 41,42 & 43)
40	35341	1	Piston, Pin & Ring Set (.020" Over- Sized) (Incl. Nos. 41, 42 & 43)
41	35329	1	Piston & Pin Ass'y. (Std.) (Incl. No. 43)
41	35430	1	Piston & Pin Ass'y. (.010" Oversized) (Incl. No. 43)
41	35431	1	Piston & Pin Ass'y. (.020" Oversized) (Incl. No. 43)
42	34866	1	Ring Set (Std.)
42	34867	1	Ring Set (.010")
42	34868	1	Ring Set (.020")
45	35330	1	Connecting Rod Ass'y.(Incl. Nos. 46 & 47)
46	650908	1	Bolt, Connecting Rod
47	650882	2	Bolt, Connecting Rod
48	35313	2	Lifter Valve
50	35314A	1	Camshaft Ass'y.
51	35315	1	Counter-Balance Weight Ass'y.
52	31356	1	Oil Pump Assembly
60	35316	1	Blower Housing Extension
64	30063	1	Torx T-30 Hex Washer Hd. Sems 1/4-20 x 1/2
64	30063	1	Screw, Torx T-30 Hex Washer Hd. 10-24 x 1/2
65	650128	1	Screw, Hex Hd. Sems, 10-24 x 1/2
65	650128	1	Screw, Hex Hd. Sems, 10-24 x 1/2
69	35317	1	* Engine Mounting Flange Gasket
70	35318	1	Engine Mounting Flange (Incl. Nos. 72, 75 & 80)
72	31927	1	Oil Drain Plug
75	35319	1	Oil Seal
80	35320	1	Governor Shaft
81	35479	1	Flat Washer
81	35479	1	Flat Washer
82	35321	1	Governor Weight Ass'y.
83	35322	1	Governor Spool
84	29193	1	Retaining Ring
86	650833	7	Screw, Hex Washer Hd. Powerlok, 1/4-20 x 1-3/16
88	31707A	1	Governor Gear Spacer
89	32589	1	Flywheel Key
90	611094	1	Flywheel
92	650880	1	Flywheel Washer

www.mymowerparts.com

For Discount Tecumseh Engine Parts Call 606-678-9623 or 606-561-4983

Ref #	Part Number	Qty	Description
93	650881	1	Flywheel Nut
100	35135	1	Lamination
101	610118	1	Spark Plug Cover
102	650872	2	Stud
103	650814	2	Screw, Torx T-15 Hex Washer Hd. Sems, 10-24 x 1
110	35183	1	Ground Wire Ass'y.
119	35306	1	* Head Gasket
120	35307	1	Cylinder Head
121	730218	1	Valve Guide Kit (Incl. 2 of No. 122)
122	792035	2	Retaining Ring
123	35288	1	Intake Pipe Brace
124	650738	2	Screw, Hex Washer Spinlock Hd., Thread Forming, 1/4-20 x 5/8
125	35308	1	Exhaust Valve (Stellite) (Std.)
125	35433	1	Exhaust Valve (1/32" Oversized)
126	35309	1	Intake Valve (Std.)
126	35432	1	Intake Valve (1/32" Oversized)
127	650691	6	Flat Washer
128	650690	6	Belleville Washer
130	650946	2	Head Bolt, Screw
130	650692	4	Screw, Hex hd., 5/16-18 x 1-3/4
135	34046	1	Spark Plug (RL86C)
141	33481*+	2	"O" Ring
141	33481*+	2	"O" Ring
142	35475	2	Push Rod Tube
144	33484*+	1	"O" Ring
145	650168	1	Flat Washer
146	32610A	1	Screw, Flanged Hex Hd., 1/4-20 x 29/32
147	33509*+	1	"O" Ring
148	34410*+	1	"O" Ring
149	35310	1	Rocker Arm Housing
149	33510	2	Lower Valve Spring Cap
150	33507	2	Valve Spring
151	33508	2	Valve Spring Cap Ass'y.
152	35295*+	2	"O" Ring
153	35296	1	Push Rod Guide
154	650878	2	Rocker Arm Stud
155	35297	2	Rocker Arm
156	35298	2	Rocker Arm Bearing
157	28264*+	2	Lock Nut
158	35466	2	Push Rod
159	35299*+	1	"O" Ring
160	35300	1	Rocker Arm Cover
161	650879	2	Screw, Torx T-20 Truss Hd. Thrd. Cut- ting W/Sealing Lockwasher, 8-32 x 1/2
162	650903	2	* Hex Hd. Jam Nut
169	27896	1	* Valve Chamber Gasket
169	27896	1	* Valve Chamber Gasket
170	28423	1	Breather Body
171	28424	1	Filter Element
172	28425	1	Cover Valve Spring Box
173	35350	1	Breather Tube
174	650128	2	Screw, Hex Hd. Sems, 10-24 x 1/2
182	650517	2	Screw, Hex., Sems, 1/4-20 x 13/16
184	33263	1	* Gasket Carb To Intake Pipe
185	35304	1	Intake Pipe
186B	35346	1	Governor Link Spring

www.mymowerparts.com

For Discount Tecumseh Engine Parts Call 606-678-9623 or 606-561-4983

Ref #	Part Number	Qty	Description
186	35302	1	Governor Link
200	35427	1	Control Bracket Ass'y. (Incl. Nos. 203, 204 & 206)
203	31342	1	Compression Spring
204	650549	1	Screw, Fil. Hd., 5-40 x 7/16
209	30200	2	Screw, Hex Washer Hd. Sems, 10-24 x 9/16
210	27793	1	Conduit Clip
211	28942	1	Screw, 10-32 x 3/8"
223	792028	2	Screw, Hex Hd. Sems, 5/16-18 x 7/8
224	33515	1	* Gasket, Intake Pipe To Head
225	35286	1	Carburetor Tube
239	33629	2	* Gasket Air Cleaner Elbow
243	650875	2	Screw, Fil. Hd. Sems, 10-32 x 5 1/4
245	34910	1	Air Cleaner Filter
246	35108	1	Air Cleaner Filter
250	34911	1	Air Cleaner Cover (Black)
251	650784	1	Screw & Washer
260	35338A	1	Blower Housing
261	30063	1	Screw, Torx T-30 Hex washer Sems, 1/4 -20 x 1/2
262	29747B	2	Screw, Hex Hd. Sems, 5/16-24 x 21/32
264	650273	2	Screw, Hex Hd. Sems, 5/16-18 x 5/8
265	35290	1	Cylinder Head Cover
266	650876	2	Screw, Hex Hd. Shoulder, 5/16-18 x 1-1/4
270	35292	1	Manifold Ass'y.
271	35293	1	Locking Plate (Manifold)
290	29774	1	Fuel Line (5.50")
292	26460	1	Fuel Line Clamp
305	33992A	1	Oil Fill Tube
307	33590	1	"O" Ring
308	33997	1	Fill Tube Clip
310	33589A	1	Oil Dipstick
325	34246	1	Wire Clip
370	34346	1	Decal-Lubrication
380	632427	1	Carburetor

www.mymowerparts.com

For Discount Tecumseh Engine Parts Call 606-678-9623 or 606-561-4983

Engine Parts List #2

ILLUSTRATION SHOWS TYPICAL PARTS ONLY. ORDER BY PART NUMBER. PARTS NOT LISTED ARE SUPPLIED BY OEM.

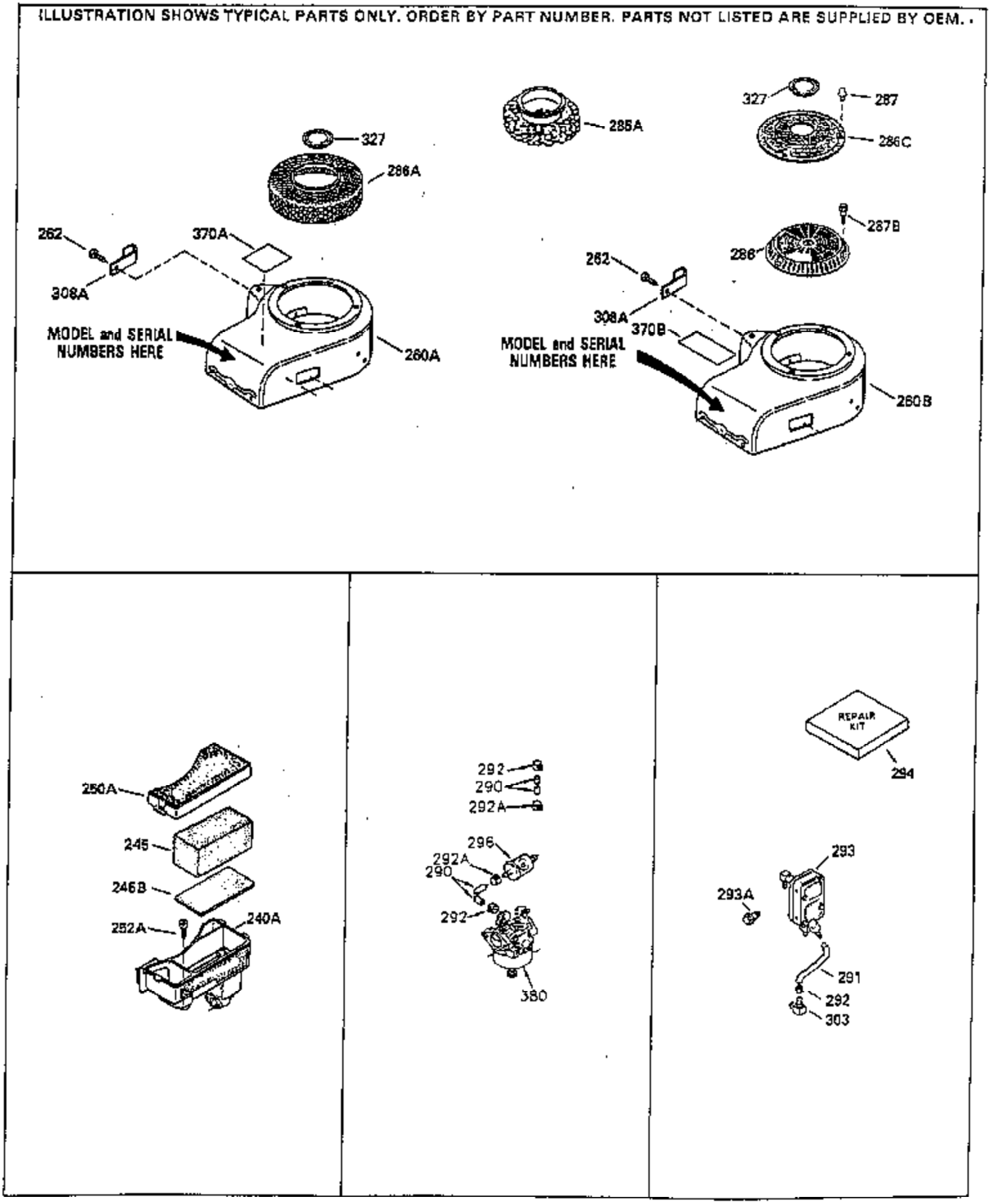

www.mymowerparts.com

For Discount Tecumseh Engine Parts Call 606-678-9623 or 606-561-4983

Ref #	Part Number	Qty	Description
39	30322	1	Keps Nut & Washer
64	30063	1	Torx T-30 Hex Washer Hd. Sems 1/4-20 x 1/2
64	30063	1	Screw, Torx T-30 Hex Washer Hd. 10-24 x 1/2
240A	34909	1	Body Air Cleaner (Black)
243	650875	2	Screw, Fil. Hd. Sems, 10-32 x 5 1/4
245	34910	1	Air Cleaner Filter
246	35108	1	Air Cleaner Filter
262	29747B	2	Screw, Hex Hd. Sems, 5/16-24 x 21/32
290	29774	1	Fuel Line (5.50")
292	26460	1	Fuel Line Clamp
296	34279B	1	Fuel Filter
308A	35437	1	Fill Tube Clip
325	34246	1	Wire Clip
370A	34686	1	Decal-Name
380	632427	1	Carburetor

www.mymowerparts.com

ILLUSTRATION SHOWS TYPICAL PARTS ONLY. ORDER BY PART NUMBER. PARTS NOT LISTED ARE SUPPLIED BY OEM.

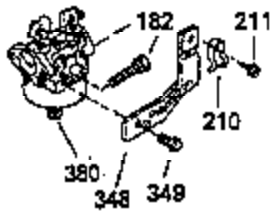

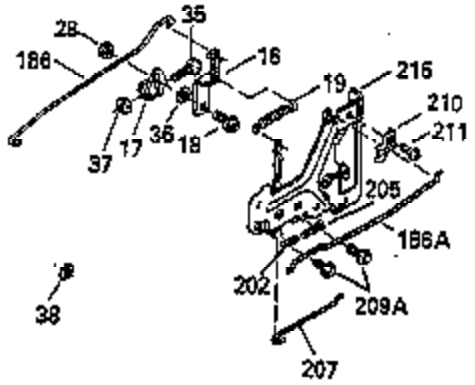

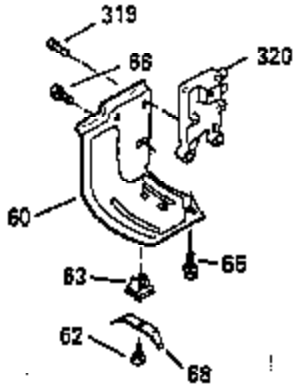

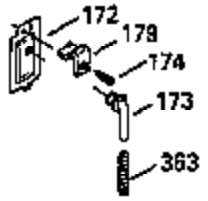

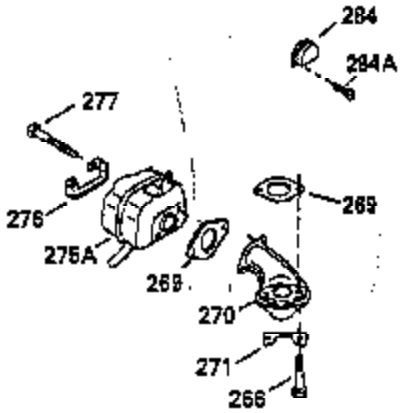

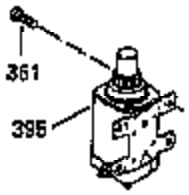

OPTIONAL ELECTRIC STARTER MOTOR

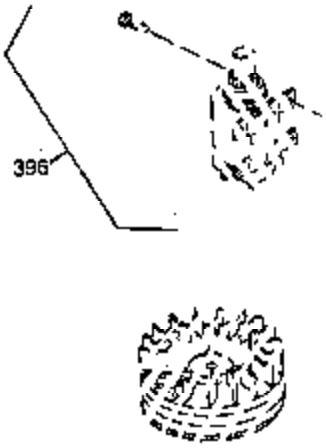

OPTIONAL SPARK ARRESTOR

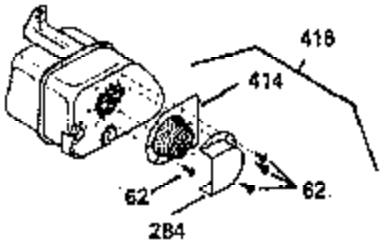

OPTIONAL DEBRIS SCREEN

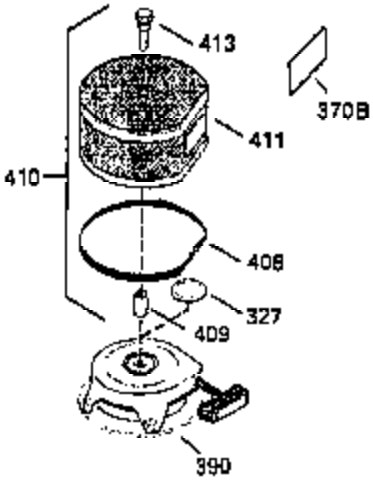

For Discount Tecumseh Engine Parts Call 606-678-9623 or 606-561-4983

Ref #	Part Number	Qty	Description
16	32651	1	Governor Lever
17	29916	1	Governor Lever Clamp
18	650548	1	Screw, Hex Washer Hd., 8-32 x 5/16
19	35203	1	Control Spring
35	29826	1	Governor Lever Screw
36	29918	1	E.T. Lock Washer
37	29216	1	Lock Nut
38	31919	2	Piston Pin Retaining Ring
38	29642	1	Retaining Ring
39	30322	1	Keps Nut & Washer
60	35316	1	Blower Housing Extension
62	650760	1	Screw, 8-32 x 3/8"
63	28545	1	Grommet
64	30063	1	Torx T-30 Hex Washer Hd. Sems 1/4-20 x 1/2
64	30063	1	Screw, Torx T-30 Hex Washer Hd. 10-24 x 1/2
65	650128	1	Screw, Hex Hd. Sems, 10-24 x 1/2
65	650128	1	Screw, Hex Hd. Sems, 10-24 x 1/2
68	33356	1	Ground Terminal
172	28425	1	Cover Valve Spring Box
173	35350	1	Breather Tube
174	650128	2	Screw, Hex Hd. Sems, 10-24 x 1/2
182	650517	2	Screw, Hex., Sems, 1/4-20 x 13/16
186	35302	1	Governor Link
210	27793	1	Conduit Clip
211	28942	1	Screw, 10-32 x 3/8"
243	650875	2	Screw, Fil. Hd. Sems, 10-32 x 5 1/4
246	35108	1	Air Cleaner Filter
266	650876	2	Screw, Hex Hd. Shoulder, 5/16-18 x 1-1/4
270	35292	1	Manifold Ass'y.
271	35293	1	Locking Plate (Manifold)
325	34246	1	Wire Clip
348	35426	1	Remote Choke Bracket
349	650767	2	Screw, 8-32 x 27/64"
361	30063	4	Screw, Torx T-30, 1/4-20 x 1/2"
380	632427	1	Carburetor
395	33605	1	Electric Starter Motor

www.mymowerparts.com

For Discount Tecumseh Engine Parts Call 606-678-9623 or 606-561-4983

Engine Parts List #4

ILLUSTRATION SHOWS TYPICAL PARTS ONLY. ORDER BY PART NUMBER. PARTS NOT LISTED ARE SUPPLIED BY OEM.

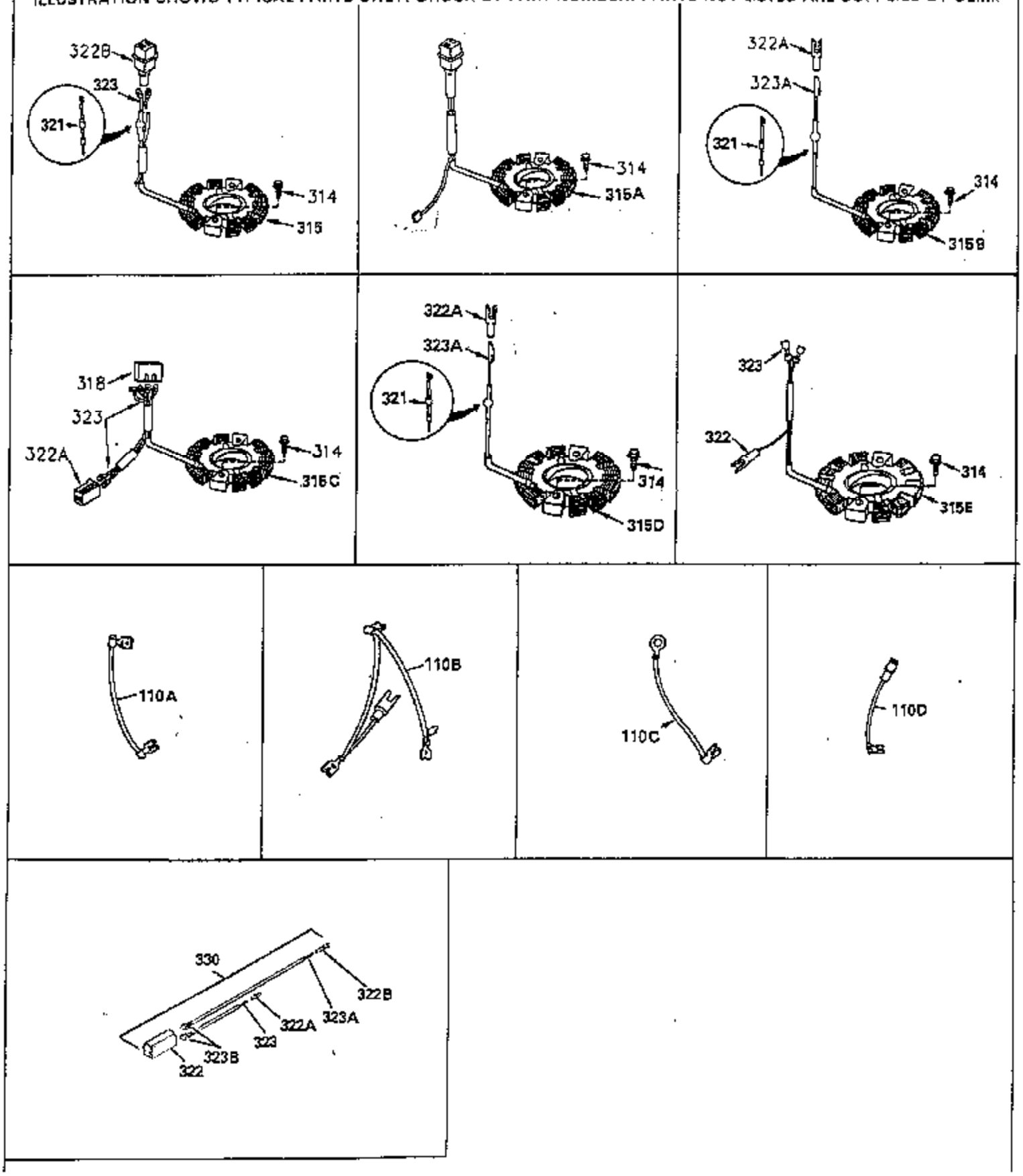

www.mymowerparts.com

For Discount Tecumseh Engine Parts Call 606-678-9623 or 606-561-4983

Ref #	Part Number	Qty	Description
39	30322	1	Keps Nut & Washer
64	30063	1	Torx T-30 Hex Washer Hd. Sems 1/4-20 x 1/2
64	30063	1	Screw, Torx T-30 Hex Washer Hd. 10-24 x 1/2
243	650875	2	Screw, Fil. Hd. Sems, 10-32 x 5 1/4
246	35108	1	Air Cleaner Filter
315	611104	1	Alternator Coil (3/5 Split)(Incl. 321 ,322& 323)
321	611161	1	Diode
322	611142	1	Connector Body
323	611118	1	Terminal
325	34246	1	Wire Clip

www.mymowerparts.com