For Hydro-Gear Parts Call K&T 606-678-9623 or 606-561-4983

107-2466
314-2200L

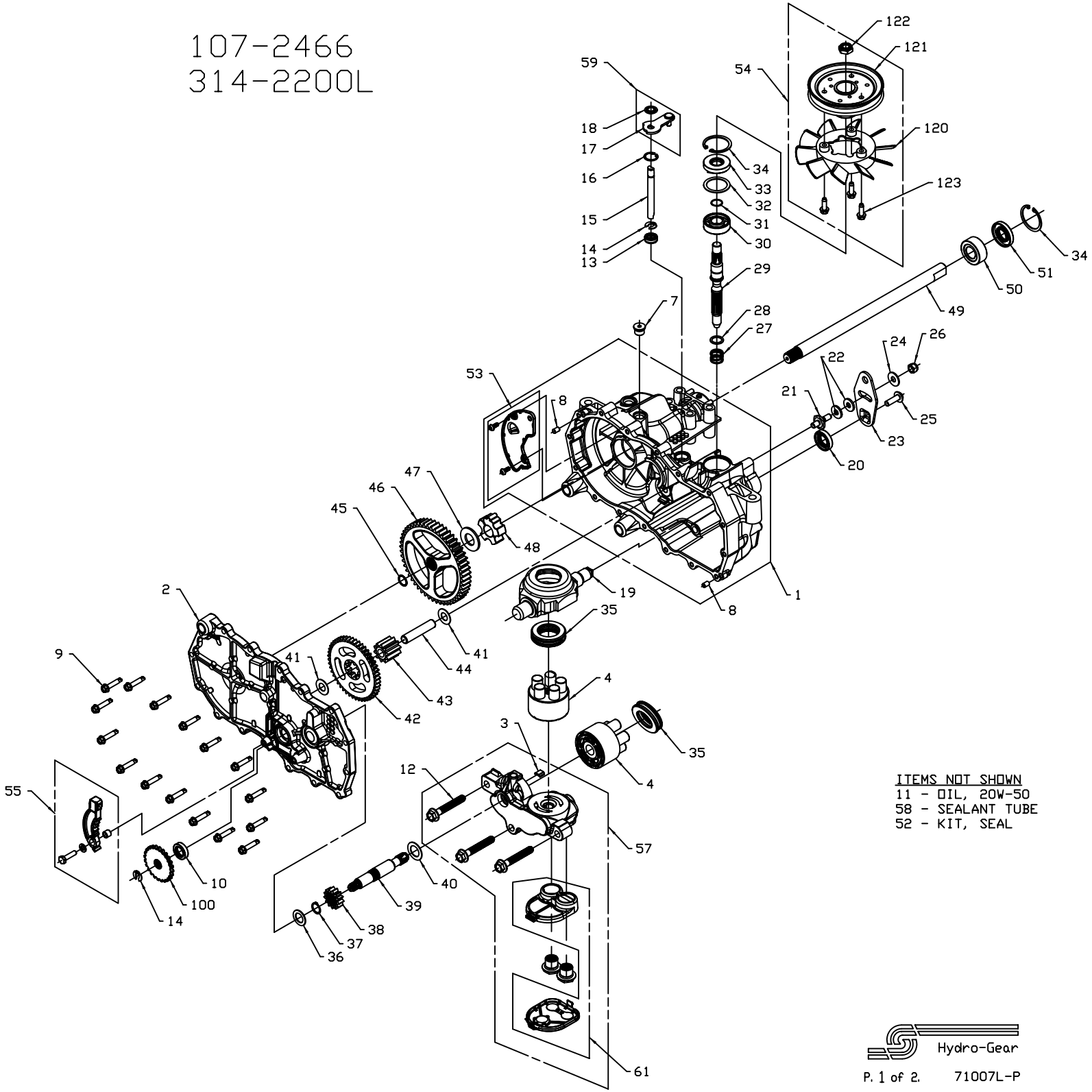

ITEMS NOT SHOWN
11 - OIL, 20W-50
58 - SEALANT TUBE
52 - KIT, SEAL

Hydro-Gear

P. 1 of 2. 71007L-P

www.mymowerparts.com

107-2466
314-2200L

ITEM	PART #	QTY	DESCRIPTION
1	70862L	1	ASSEMBLY, MAIN HOUSING-LH
			HOUSING, MAIN LH-MACHINED
			BUSHING, .865 X .985 X .790
			PLATE, EXPANSION LH
			SCREW, 10-32 X 1/2 (SELF-TAPPING)
			PIN, STANDARD, HEADLESS
			SEALANT TUBE, 10.3 oz
			SEAL, LIP .375 X .75 X .25
2	70863L	1	ASSEMBLY, SIDE-LH
			HOUSING, SIDE LH-MACHINED
			BUSHING, .624 X .719 X .562
			BUSHING, .865 X .985 X .790
3	51448	1	PLATE, BYPASS
4	70331	2	ASSEMBLY, BLOCK
			BLOCK, CYLINDER
			PISTON
			SPRING, COMPRESSSION
			WASHER, THRUST
7	9005110-5600	1	PLUG, SAE #6
8	9004800-2506	2	PIN, STAINLESS, HEADLESS
9	51190	16	HFHCS 1/4-20 X 1.25 (SELF-TAPPING)
10	44761	1	SEAL, LIP .625 X 1.000 X .250
11		56 oz.	OIL, 20W-50
12	50016	3	BOLT, HEX FLANGE 3/8-24 X 2.5
13	51626	1	SEAL, LIP .375 X .75 X .25
14	51628	2	RING, RETAINING .375 EXT
15	51625	1	ROD, BYPASS
16	51627	1	RING, RETAINING .750 INT
17	51910	1	ARM, BYPASS
18	51630	1	RING, RETAINING .375 EXT (PUSHNUT)
19	51048	1	SWASHPLATE, TRUNNION, MACHINED
20	51140	1	SEAL, LIP 18 X 32 X 7
21	50426	1	STUD, SHORT 5/16-24
22	50281	2	PUCK, FRICTION
23	51631	1	ARM, CONTROL
24	44130	1	WASHER, FLAT 11/32 ID X 7/8 OD X 1/16
25	51812	1	TWHCS 5/16-24 X 1.0
26	50317	1	NUT, HEX LOCK 5/16-24 UNJF
27	2003014	1	SPRING-HELICAL COMPRESSION
28	2003017	1	WASHER .591 X .787 X .040
29	51062	1	SHAFT, INPUT
30	50315	1	BEARING, BALL 17MM ID X 40MM OD X 12MM
31	2000022	1	RING, RETAINING WIRE .561 ID
32	50951	1	SPACER
33	51161	1	SEAL, LIP 17 X 40 X 7
34	50329	2	RING, RETAINING
35	50551	2	BEARING, THRUST 30 X 52 X 13
36	44371	1	WASHER, FLAT 5/8 ID X 1.0 OD X .05
37	44145	1	RING, RETAINING
38	51130	1	GEAR, PINION, 13T
39	51632	1	SHAFT, MOTOR
40	51069	1	WASHER, MOTOR SHAFT .71 ID X 1.16 OD X .04
41	50132	2	WASHER, HT .5 ID X 1.0 OD X.032
42	51129	1	GEAR, 10T/48T
43	51043	1	GEAR, 10T JACKSHAFT
44	51083	1	PIN, JACKSHAFT
45	44871	1	RING, SPIRAL RETAINING
46	51633	1	GEAR, 52T BULL

ITEM	PART #	QTY	DESCRIPTION
47	44875	1	WASHER, 3/4 ID X 1-1/2 OD X .13
48	51088	1	BEARING, SLEEVE (INBOARD)
49	51634	1	AXLE, .75 X 13.11 OD
50	51089	1	BUSHING, .752 X 1.571 X .625
51	51066	1	SEAL, LIP .750 X 1.577 X .250
52	70853	1	KIT, SEAL
			SEAL, LIP .625 X 1.000 X .250
			SEAL, LIP .375 X .75 X .25
			SEAL, LIP 18 X 32 X 7
			SEAL, LIP 17 X 40 X 7
			SEAL, LIP .750 X 1.577 X .250
			SEAL, LIP 1.00 X 1.577
			SEAL, LIP .50 X .88 X .25
			RING, RETAINING .375 EXT
			RING, RETAINING .750 INT
			RING, RETAINING .375 EXT
			RING, RETAINING 1.56 INT
			RING, RETAINING WIRE .561
			RING, RETAINING .62 EXT
			RING, RETAINING, SPIRAL
53	70868L	1	KIT, EXPANSION PLATE, LH
			PLATE, EXPANSION LH
			SCREW, 10-32 X 1/2 (SELF-TAPPING)
54	70591	1	KIT, FAN-PULLEY
			FAN, 6", 10 BLADE
			PULLEY, 4.5"
			NUT, HEX LOCK 1/2-20 (NYLON INSERT)
			SCREW, HEX WASHER HEAD TAPPING 1/4-20 X .75
55	70865	1	KIT, BRAKE ARM
			ARM, PARKING BRAKE
			WASHER .28 X .50 X .063
			BOLT, 1/4-20 X 1 W/PATCH
			BUSHING, .260 X .394 X .330
57	70864L	1	KIT, CENTER SECTION-FILTER LH
			CENTER SECTION, LH-MACHINED
			BUSHING, .707 X .788 X .591
			PLATE, BYPASS
			BOLT, HEX FLANGE 3/8-24 X 2.5
			FILTER, BASE
			CHECK PLUG ASSEMBLY .027, WASHER
			ASSEMBLY, COVER
58	50928	1	SEALANT TUBE, 10.3 oz
59	71006	1	KIT, BYPASS ARM
			ARM, BYPASS
			RING, RETAINING .375 EXT (PUSHNUT)
61	70911	1	KIT, FILTER
			FILTER, BASE
			ASSEMBLY, COVER
100	51635	1	DISC, COG BRAKE
120	51365	1	FAN, 6", 10 BLADE
121	50302	1	HUB PULLEY KIT 4.5"
122	51244	1	HEX LOCK NUT, 1/2-20 (NYLON INSERT)
123	50752	3	HEX WASHER HEAD TAPPING SCREW 1/4-20 X .25

Hydro-Gear

www.mymowerparts.com

For Hydro-Gear Parts Call K&T 606-678-9623 or 606-561-4983