For Husqvarna Parts Call 606-678-9623 or 606-561-4983

PARTS LIST NO. 530084176		WEED EATER ® PARTS LIST	MODEL(s) SG14, SG15, TE14, TE15, TE15 Plus, TE44, TE45, XT114 & XT115
DATE 10/28/99	REPLACES 530084176-1/13/98	**Note:** Illustration may differ from actual model due to design changes	

WARNING

All repairs, adjustments and maintenance not described in the Operator's Manual must be performed by qualified service personnel.

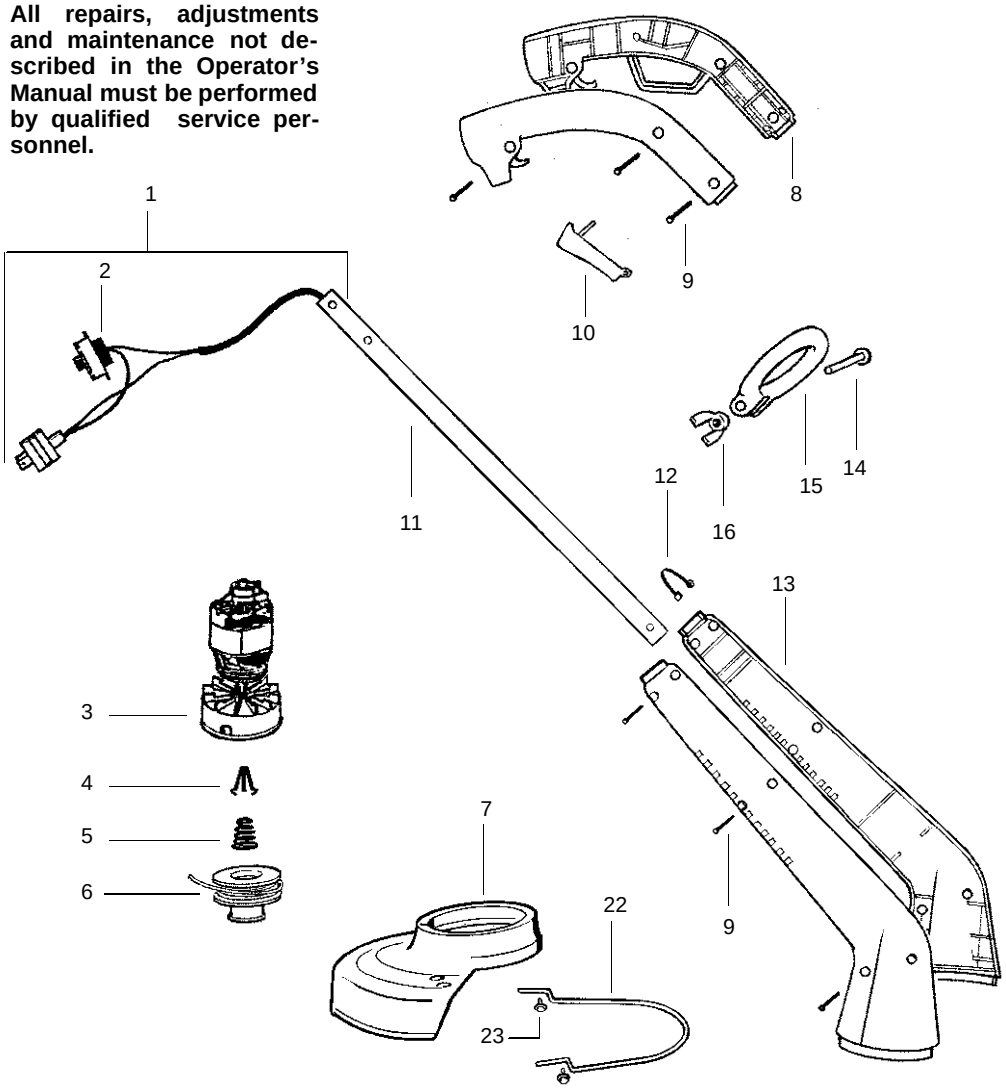

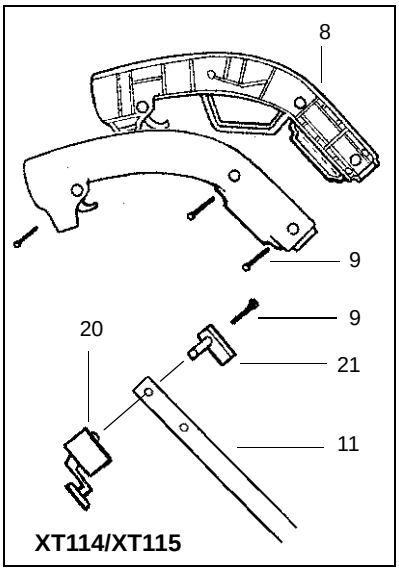

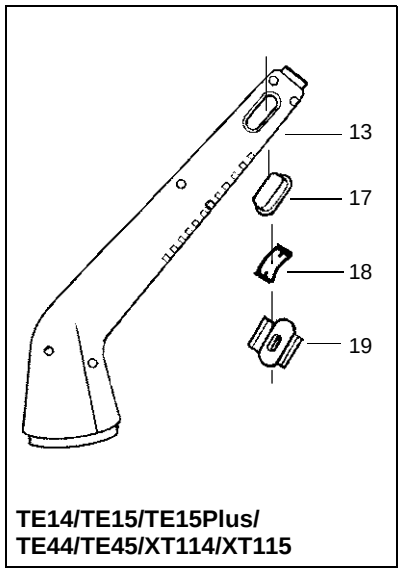

Ref.	Part No.	Description	Ref.	Part No.	Description	Ref.	Part No.	Description
1.	530401999	Wiring Harness (Incls. 2)	11.	530402545	Tube w/Decal	19.	530402557	Saddle-Tine TE14/TE15/TE15Plus/ TE44/TE45/XT114/XT115
2.	530401997	On/Off Switch	12.	530402540	Snap Button			
3.	530402516	Motor/Hub Ass'y.	13.	-	Housing Set	20.	530402175	Button-Handle XT114/XT115
4.	530401957	Retainer-Spool		530401971	SG14/SG15	21.	530402177	Guide-Tube XT114/XT115
5.	530401958	Spring-Return		530402598	XT114/XT115	22.	530402661	Edging Guide TE15Plus
6.	952701663	Spool w/ Line		530402597	TE14/TE15/TE15Plus/ TE44/TE45	23.	530015815	Screw TE15Plus
7.	-	Shield w/Limiter	14.	530401989	Bolt			
	530402515	SG14/TE14/TE44	15.	-	Assist Handle	Not Shown		
	530403261	SG15/TE15/TE15Plus/ TE45		530401988	SG14/SG15/TE14/TE15/ TE15Plus/TE44/TE45		-	Operator Manual SG14/SG15/TE14/TE44/ TE45/XT114/XT115
	530402522	XT114		530401991	XT114/XT115		530084129	
	530402523	XT115	16.	530016118	Wing Nut		530087196	TE15/TE15Plus
8.	-	Handle Set	17.	530402558	Push Button		530402490	Warning Decal
	530401966	SG14/SG15/TE14/ TE15/TE15Plus/ TE44/TE45			TE14/TE15/TE15Plus/ TE44/TE45/XT114/XT115			
	530401965	XT114/XT115	18.	530401954	Spring-Button Return TE14/TE15/TE15Plus/ TE44/TE45/XT114/XT115			
9.	530016120	Screw						
10.	530401994	Trigger Switch						

✓ = NEW PART NUMBER FOR THIS IPL

★ = REFER TO THE SERVICE REFERENCE INDICATED FOR MORE INFORMATION. (LOCATED AT END OF IPL)

www.mymowerparts.com