For Homelite Discount Parts Call 606-678-9623 or 606-561-4983



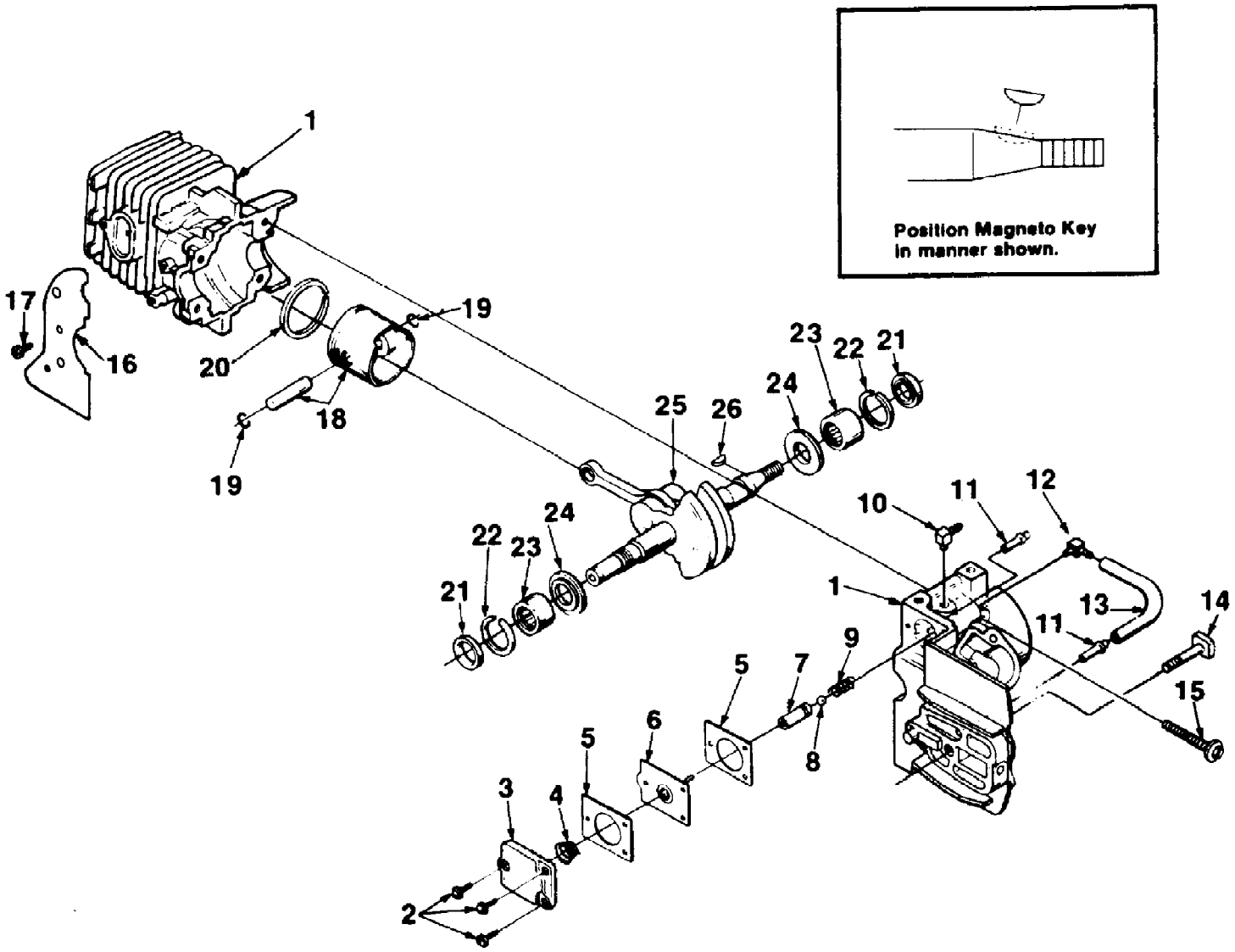


www.mymowerparts.com

For Homelite Discount Parts Call 606-678-9623 or 606-561-4983



| Ref # | Part Number | Qty | S/P/F | Description |
|---|---|---|---|---|
| 1 | A95071A | 1 | | CRANKCASE & CYLINDER ASSY. |
| 2 | 80571 | 3 | /P | SCREW- Pan hd. (6-32 x 3/8) |
| 3 | 692241C | 1 | | COVER- Oil pump |
| 4 | 69447 | 1 | /P | SPRING- Oil pump |
| 5 | 692441 | 2 | S | GASKET- Oil pump |
| 6 | A12356B | 1 | S | PLUNGER- Oil pump |
| 7 | 693431 | 1 | | BODY- Oil pump |
| 8 | 60051 | 1 | S | BALL- Check valve |
| 9 | 68570 | 1 | | SPRING- Check valve |
| 10 | 70204 | 1 | /P | FITTING- Oil line |
| 11 | 94619 | 2 | | FITTING- Tube |
| 12 | 98109 | 1 | | FITTING- Oil line |
| 13 | 70161 | 1 | | LINE- Oil |
| 14 | 69195 | 1 | /P | BOLT- Guide bar |
| 15 | 88044 | 4 | | SCREW- Sems hex hd. (8-32 x 1) |
| 16 | 69094 | 1 | S | SHIELD- Sawdust |
| 17 | 93932 | 2 | | SCREW |
| 20 | A69393 | 1 | F | Piston & Pin Assembly (See Index #18) |
| | 65261 | 2 | /P | RING- Piston pin retaining (See Index #19) |
| | 69312 | 1 | /P | RING- Piston (primary source) (See Index #20) |
| | 693121A | 1 | S | RING- Piston (alternate source) |
| 21 | 94638 | 2 | S | SEAL |
| 22 | 69407 | 2 | S | SPACER |
| 23 | 12530 | 2 | | BEARING- Needle |
| 24 | 69093B | 2 | /P | WASHER- Thrust |
| 25 | A94992 | 1 | S | CRANKSHAFT |
| | 81112 | 1 | | NUT (Not shown) |
| 26 | 69250 | 1 | /P | KEY- Magneto |

www.mymowerparts.com

For Homelite Discount Parts Call 606-678-9623 or 606-561-4983



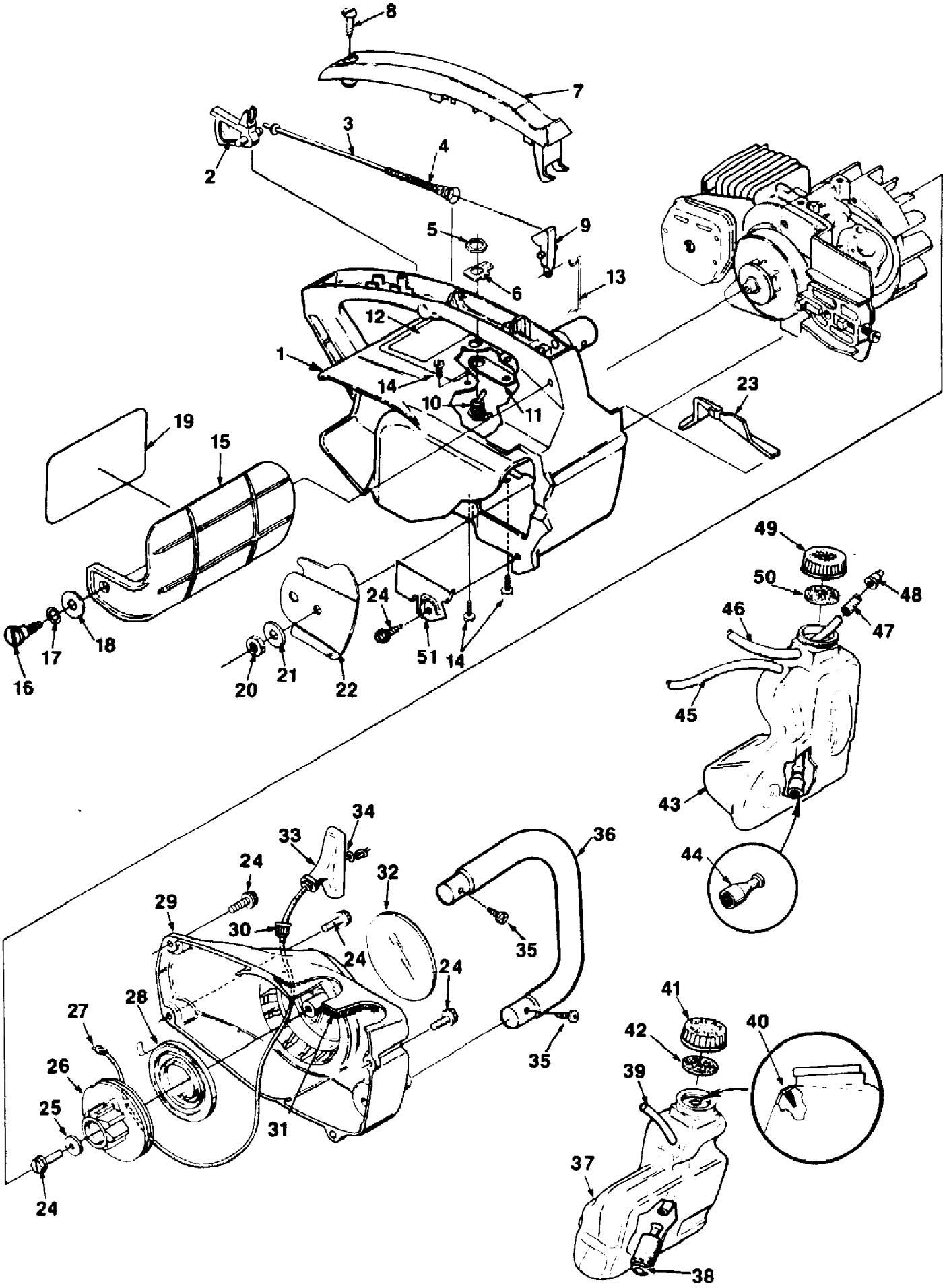


www.mymowerparts.com

For Homelite Discount Parts Call 606-678-9623 or 606-561-4983



| Ref # | Part Number | Qty | S/P/F | Description |
|---|---|---|---|---|
| 1 | A98086 | 1 | | HOUSING- Engine |
| 2 | 70619 | 1 | | TRIGGER- Rear |
| 3 | A98088 | 1 | | ROD- Throttle |
| 4 | 69249 | 1 | | SPRING- Throttle rod |
| 5 | 72084A1 | 1 | S | NUT- Hex |
| 6 | 70834 | 1 | /P | PLATE-"ON"-"OFF" |
| 7 | 98021 | 1 | | COVER- Handle |
| 8 | 82312 | 1 | /P | SCREW- Thread forming (10 x 625) |
| 9 | 69107 | 1 | | LEVER- Throttle |
| 10 | A94721 | 1 | | SWITCH & LEAD |
| 11 | 96417 | 1 | | STRAP- Ground |
| 12 | 70835 | 1 | | PLATE INSTRUCTION 1 |
| 13 | 69255C | 1 | /P | ROD- Front throttle |
| 14 | 88063 | 4 | /P | SCREW- Hex hd. |
| 15 | A70796C | 1 | S | GUARD- Hand |
| 16 | 95714 | 1 | S | SCREW- Shoulder |
| 17 | 95694 | 1 | | WASHER- Belleville |
| 18 | 96102 | 1 | | WASHER- Flat |
| 19 | 96990 | 1 | | DECAL |
| 20 | 810652 | 1 | S | NUT- Guide bar 1/4-28 |
| 21 | 69309A | 1 | /P | WASHER- Flat |
| 22 | 693601 | 1 | | PLATE- Guide bar |
| 23 | 69263 | 1 | | COVER- Air filter |
| 24 | 70771 | 6 | S/F | SCREW- Thread forming |
| 25 | 94062 | 1 | /P | WASHER- Retaining |
| 26 | 97768 | 1 | | PULLEY- Starter |
| 27 | 97899 | 1 | S | ROPE- Starter |
| 28 | A97908 | 1 | /P | SPRING & CONTAINER |
| 29 | A98085 | 1 | | STARTER HOUSING ASSY. |
| 30 | 969811A | 1 | /P | BUSHING- Starter housing |
| 31 | 69443 | 1 | | FILTER- Fuel tank valve |
| 32 | 69887 | 1 | | DECAL- (XL) |
| 33 | 70211 | 1 | S | GRIP- Starter |
| 34 | 84025 | 1 | /P | WASHER- Flat |
| 35 | 94065 | 1 | | SCREW- Thread forming |
| 36 | 94508 | 1 | | HANDLE BAR |
| 37 | A70899B | 1 | | TANK- Fuel |
| 38 | 96639 | 1 | S | FILTER- Fuel |
| 39 | 7031029 | 1 | | LINE- Fuel 7 1/4" |
| 40 | 69451 | 1 | /P | VALVE- Check (Duck bill) |
| 41 | A97228 | 1 | | CAP- Fuel tank (red) |
| 42 | 94494 | 1 | /P | GASKET- Fuel cap |
| 43 | A70898A | 1 | S | TANK- Oil |
| 44 | A68593 | 1 | | FINDER- Oil |
| 45 | 7030924 | 1 | | LINE- Oil (6") |
| 46 | A69358B | 1 | S | LINE- Pressure |
| 47 | 69659B | 1 | | CONNECTOR- Oil |
| 48 | 69451 | 1 | /P | VALVE- Check (Duck bill) |
| 49 | A97359 | 1 | | CAP- Oil (Black) |
| 50 | 94494 | 1 | /P | GASKET- Fuel filler cap |
| 51 | 98054 | 1 | | GUARD- Chain |

www.mymowerparts.com

For Homelite Discount Parts Call 606-678-9623 or 606-561-4983



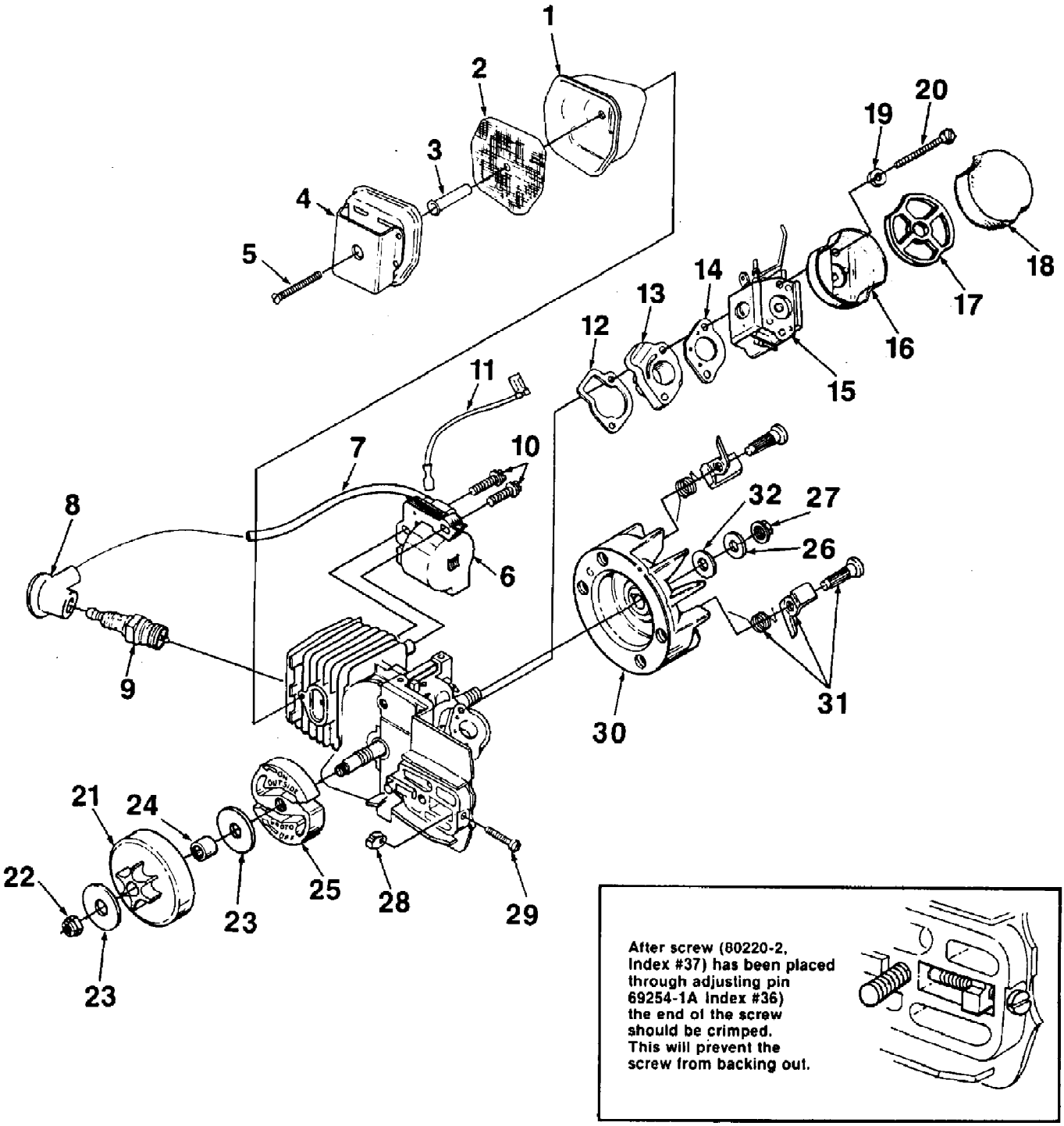


www.mymowerparts.com

For Homelite Discount Parts Call 606-678-9623 or 606-561-4983



| Ref # | Part Number | Qty | S/P/F | Description |
|---|---|---|---|---|
| | A94051C | 1 | S | MUFFLER- Complete |
| 1 | 93986 | 1 | | BODY- Muffler |
| 2 | 93991A | 1 | S/F | SCREEN- Spark arrestor |
| 3 | 9398308 | 1 | | SPACER- Muffler |
| 4 | A95428A | 1 | S | CAP- Muffler (w/shield) |
| 5 | 93460 | 1 | /P | SCREW |
| 6 | 94711A | 1 | S | MODULE- Ignition (solid state) |
| 7 | 69326 | 1 | F | LEAD- High tension |
| 8 | A33055 | 1 | /P/F | TERMINAL- Spark plug |
| 9 | 96169S | 1 | S | SPARK PLUG (Champion DJ7Y) |
| 10 | 82248 | 2 | | SCREW- Hex w/washer (8-32 x 3/4) |
| 11 | A94721 | 1 | | LEAD- Ground |
| 12 | 69143 | 1 | /P | GASKET- Intake manifold |
| 13 | A69373B | 1 | | MANIFOLD- Intake |
| 14 | 65016 | 1 | /P | GASKET- Carburetor |
| 15 | A94649A | 1 | | CARBURETOR- (HDC-65) Walbro |
| | A96481 | 1 | | CARBURETOR- (C2S-H5) Zama |
| 16 | 69148 | 1 | | CUP- Air filter |
| 17 | 69457 | 1 | | RETAINER- Air filter |
| 18 | 69141 | 1 | S | FILTER- Air |
| 19 | 83006 | 2 | /P | WASHER- Lock |
| 20 | 80481 | 2 | | SCREW- Hex hd. (10-32 x 2 1/4) |
| 21 | A95653A | 1 | | SPROCKET & DRUM |
| 22 | 81112 | 1 | | NUT- Locking (6/16-24) |
| 23 | 95299 | 2 | /P | WASHER- Thrust |
| 24 | 68512 | 1 | S | BEARING- Needle |
| 25 | A70351A | 1 | | CLUTCH (S) |
| 26 | 83002 | 1 | /P | WASHER- Lock |
| 27 | 81117 | 1 | /P | NUT- Rotor (5/16-24) |
| 28 | 692541A | 1 | | PIN- Adjusting (see insert) |
| 29 | 802202 | 1 | | SCREW- Adjusting (Fil. hd. 8-32 x 1) (see insert) |
| 30 | A95007 | 1 | S | ROTOR & STARTER PAWL (Phelon) |
| 31 | A70285D | 1 | S/F | KIT- Starter pawl |
| 32 | 84065 | 1 | S | WASHER- Flat |

www.mymowerparts.com

For Homelite Discount Parts Call 606-678-9623 or 606-561-4983



## ACCESSORIES

| | |
|---|---|
| GASKET- Oil pump body (repair) | 69596 |
| KIT- Repair (sprocket nose bar) | A-70239-B |
| LINE- Fuel (10 ft. length) | 70310-99 |
| LINE- Oil (10 ft. length) | 70309-99 |
| SAFE•T•TIP (standard) | A-70776-A |
| Includes: | |
| SCREW (Special) | 93695 |
| GREASE- Multi-use (Sprocket bearing - PT guide bar) | 17193 |
| CARRYING CASE | 94215-A |
| STARTING ROPE- 250 ft. reel 3 1/2 | 98052 |

## TOOLS

| | |
|---|---|
| WRENCH- Combination | D-24814 |
| SILASTIC (crankcase sealing) | 24823 |
| PULLER- Magneto rotor | A-24747-A |
| Includes: | |
| BOLT- 5/16-18 x 1 3/4 (1) | 80288 |
| NUT- Hex 5/16-18 (2) | 81196 |
| WRENCH- Spanner (clutch) | A-93791 |
| Includes: | |
| PIN- Clutch spanner | 23717-A |
| CARBURETOR REPAIR TOOL KIT | 17789 |
| IGNITION TEST SPARK PLUG | JA-31316-4 |
| SHIM- .015" (Air gap) | 22486 |

www.mymowerparts.com

For Homelite Discount Parts Call 606-678-9623 or 606-561-4983



| Ref # | Part Number | Qty | S/P/F | Description |
|---|---|---|---|---|
| 69596 | 69596 | 1 | | GASKET- Oil pump body (repair) |
| A-70239-B | A70239B | 1 | | KIT- Repair (sprocket nose bar) |
| 7031099 | 7031099 | 1 | S | LINE- Fuel (10 ft. length) |
| 7030999 | 7030999 | 1 | /P | LINE- 0il (10 ft. length) |
| A-70776-A | A70776A | 1 | | SAFE-T-TIP (standard) |
| 93695 | 93695 | 1 | | SCREW (Special) |
| 17193 | 17193 | 1 | | GREASE- Multi-use (Sprocket bearing-PT guide bar) |
| 94215-A | 94215A | 1 | | CARRYING CASE |
| 98052 | 98052 | 1 | | STARTING ROPE- 250 ft. reel 3 1/2 |
| D-24814 | D24814 | 1 | | WRENCH- Combination |
| 24823 | 24823 | 1 | S | SILASTIC (crankcase sealing) |
| A24747A | A24747A | 1 | | PULLER- Magneto rotor |
| 80288 | 80288 | 1 | | BOLT- 5/16-18 x 1 3/4 (1) |
| 81196 | 81196 | 1 | S/P | NUT- Hex 5/16-18 (2) |
| A-93791 | A93791 | 1 | /P | WRENCH- Spanner clutch) |
| 23717A | 23717A | 1 | /P | PIN- Clutch spanner |
| 17789 | 17789 | 1 | S | CARBURETOR REPAIR TOOL KIT |
| JA313164 | JA313164 | 1 | | IGNITION TEST SPARK PLUG |
| 22486 | 22486 | 1 | | SHIM- .015" (Air gap) |

www.mymowerparts.com

For Homelite Discount Parts Call 606-678-9623 or 606-561-4983



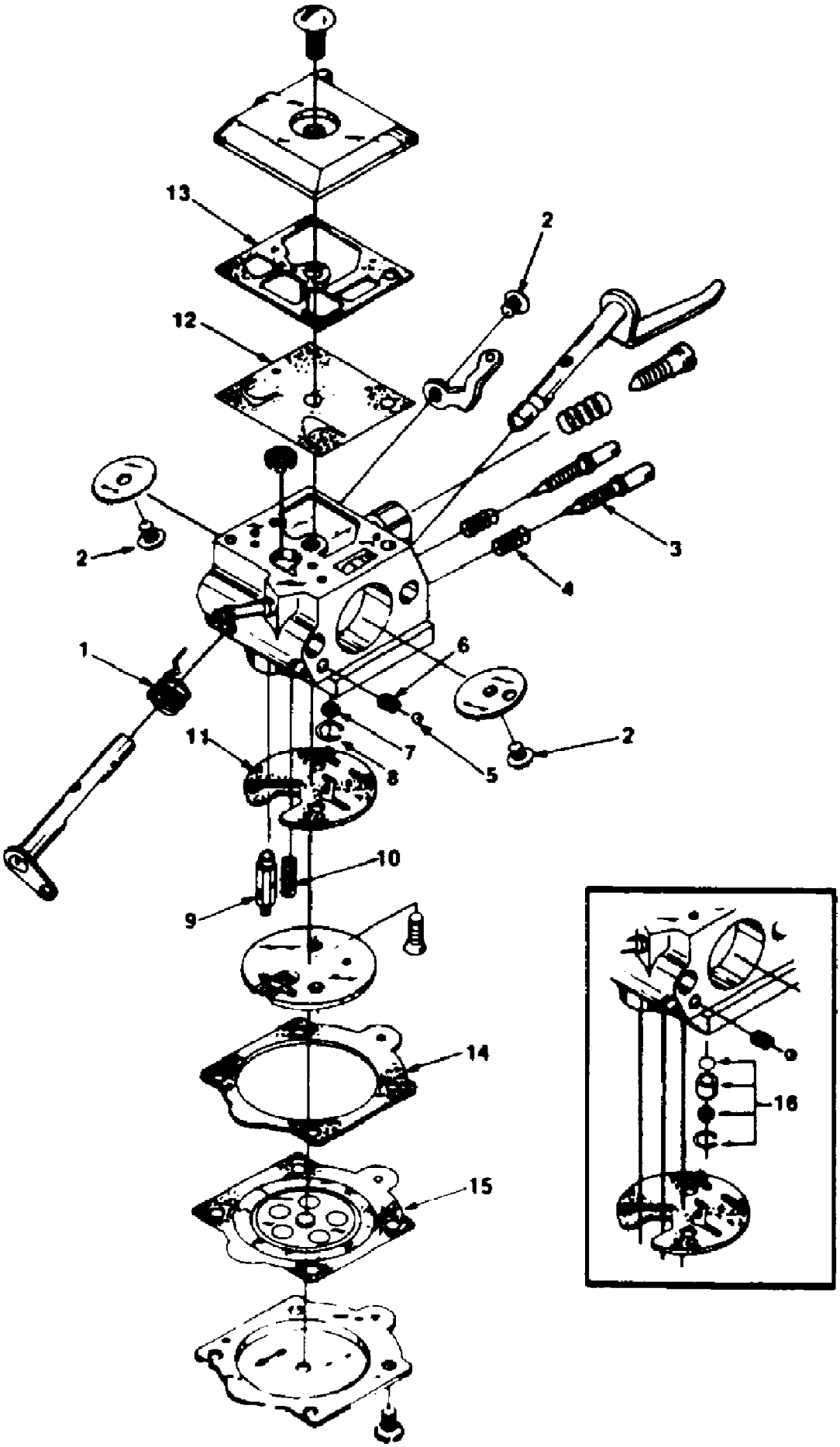


www.mymowerparts.com

For Homelite Discount Parts Call 606-678-9623 or 606-561-4983



| Ref # | Part Number | Qty | S/P/F | Description |
|---|---|---|---|---|
| 1 | 94056 | 1 | | Repair Kit |
| 2 | 94056 | 1 | | Repair Kit |
| 3 | 94056 | 1 | | Repair Kit |
| 4 | 94056 | 1 | | Repair Kit |
| 5 | 94056 | 1 | | Repair Kit |
| 6 | 94056 | 1 | | Repair Kit |
| 7 | 94056 | 1 | | Repair Kit |
| 8 | 94056 | 1 | | Repair Kit |
| 9 | 94056 | 1 | | Repair Kit |
| | 64229 | 1 | S | Valve-Inlet needle |
| 10 | 94056 | 1 | | Repair Kit |
| 11 | 94056 | 1 | | Repair Kit |
| | 94701 | 1 | | Gasket/Diaphragm Kit |
| 12 | 94056 | 1 | | Repair Kit |
| | 94701 | 1 | | Gasket/Diaphragm Kit |
| 13 | 94056 | 1 | | Repair Kit |
| | 94701 | 1 | | Gasket/Diaphragm Kit |
| 14 | 94056 | 1 | | Repair Kit |
| | 94701 | 1 | | Gasket/Diaphragm Kit |
| 15 | 94056 | 1 | | Repair Kit |
| | 94701 | 1 | | Gasket/Diaphragm Kit |
| 16 | 93910B | 1 | | Check valve repair kit |

www.mymowerparts.com

For Homelite Discount Parts Call 606-678-9623 or 606-561-4983



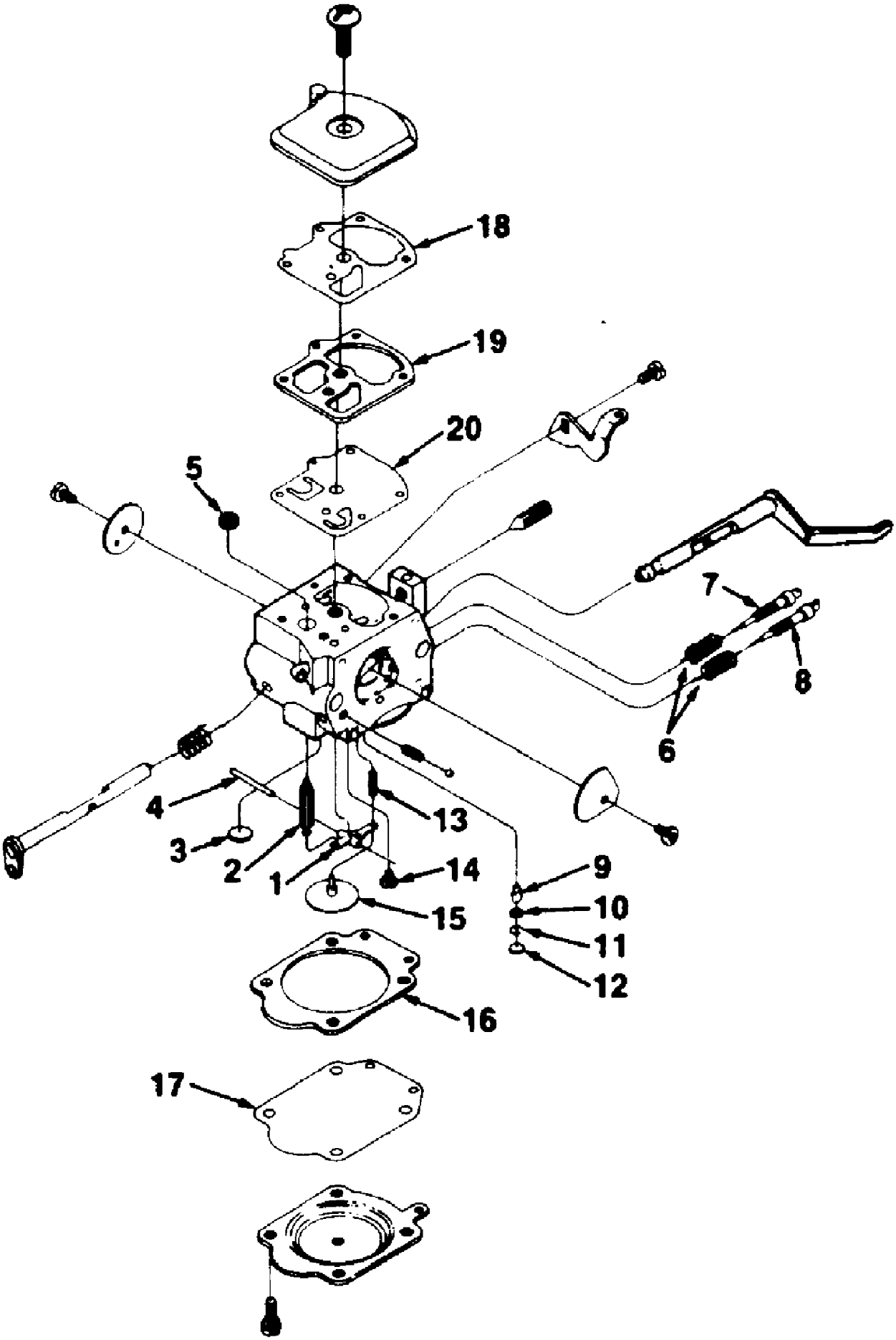


www.mymowerparts.com

For Homelite Discount Parts Call 606-678-9623 or 606-561-4983



| Ref # | Part Number | Qty | S/P/F | Description |
|---|---|---|---|---|
| 1 | 96484 | 1 | | Repair Kit |
| 2 | 96484 | 1 | | Repair Kit |
| 3 | 96484 | 1 | | Repair Kit |
| 4 | 96484 | 1 | | Repair Kit |
| 5 | 96484 | 1 | | Repair Kit |
| 6 | 96484 | 1 | | Repair Kit |
| 7 | 96484 | 1 | | Repair Kit |
| 8 | 96484 | 1 | | Repair Kit |
| 9 | 96484 | 1 | | Repair Kit |
| 10 | 96484 | 1 | | Repair Kit |
| | 96485 | 1 | | Diaphragm/Gasket Kit |
| 11 | 96484 | 1 | | Repair Kit |
| | 96485 | 1 | | Diaphragm/Gasket Kit |
| 12 | 96484 | 1 | | Repair Kit |
| | 96485 | 1 | | Diaphragm/Gasket Kit |
| 13 | 96484 | 1 | | Repair Kit |
| | 96485 | 1 | | Diaphragm/Gasket Kit |
| 14 | 96484 | 1 | | Repair Kit |
| | 96485 | 1 | | Diaphragm/Gasket Kit |
| 15 | 96484 | 1 | | Repair Kit |
| 16 | 96484 | 1 | | Repair Kit |
| 17 | UNKNOWN | 1 | | UNKNOWN |
| 18 | UNKNOWN | 1 | | UNKNOWN |
| 19 | UNKNOWN | 1 | | UNKNOWN |
| 20 | UNKNOWN | 1 | | UNKNOWN |

www.mymowerparts.com