For Discount Cub Cadet Parts Call 606-678-9623 or 606-561-4983

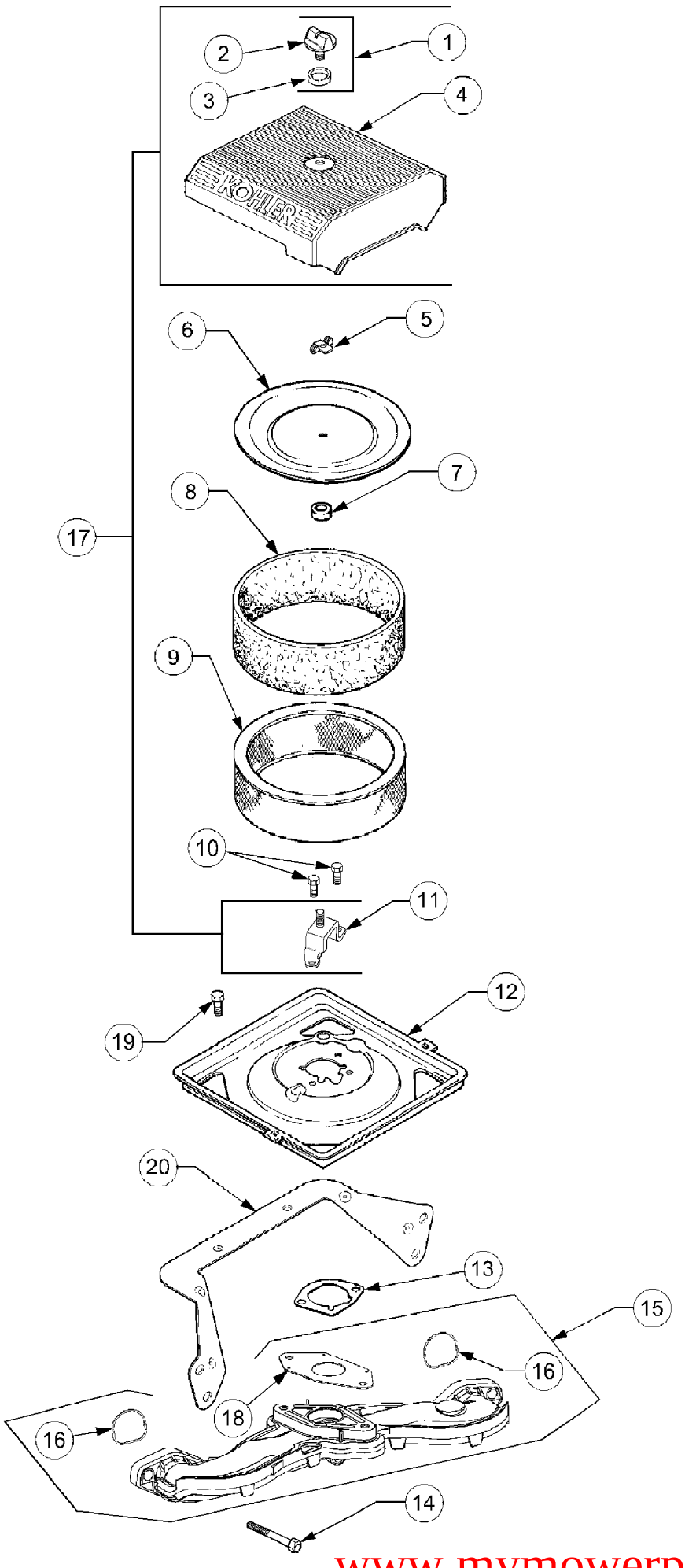

www.mymowerparts.com

For Discount Cub Cadet Parts Call 606-678-9623 or 606-561-4983

Ref #	Part Number	Qty	S/P/F	Description
1	KH-54-755-01	1	S	Kit, Knob w/Seal (Incl. Ref #2,3)
2	KH-25-341-03	1	/P	Knob, Cover
3	KH-24-153-20-S	1		Seal, Air Cleaner Cover Knob
4	KH-24-096-69-S	1	/P	Cover, Air Cleaner
5	KH-12-100-01	1	/P	Wing Nut
6	KH-24-096-01	1	/P	Cover, Inner Air Cleaner
7	KH-24-032-03	1	/P	Seal, Inner Air Cleaner
8	KH-24-083-02	1	S	Precleaner, Element
9	KH-47-083-03	1	S	Element, Air Cleaner
10	KH-M-0639016	3	S	Screw, Hex Flange, M6 x 1.0 x 16
11	KH-24-126-21	1		Bracket, Air Cleaner Base
12	KH-24-094-24-S	1	S	Base, Air Cleaner
13	KH-24-041-06	1	/P	Gasket, Air Cleaner Base
14	KH-M-0651040-S	4		Screw, Hex Flange, M6 x 1.0 x 40
15	KH-24-164-54-S	1	S	Manifold, Intake (Includes Carb Gasket KH-24-041-53-S and (2) O-Rings KH-24-153-27-S)
16	KH-24-153-27-S	2	/P	O-Ring, Intake Manifold
17	KH-24-743-08	1		Kit, Air Cleaner Cover (Incl 1-4, 11)
18	KH-24-041-53-S	1		Gasket, Carburetor
19	KH-M-0545010	2	/P	Screw, Hex Flng, M5 x 0.8 x 10
20	KH-24-126-130-S	1		Bracket, Air Cleaner Base

www.mymowerparts.com

For Discount Cub Cadet Parts Call 606-678-9623 or 606-561-4983

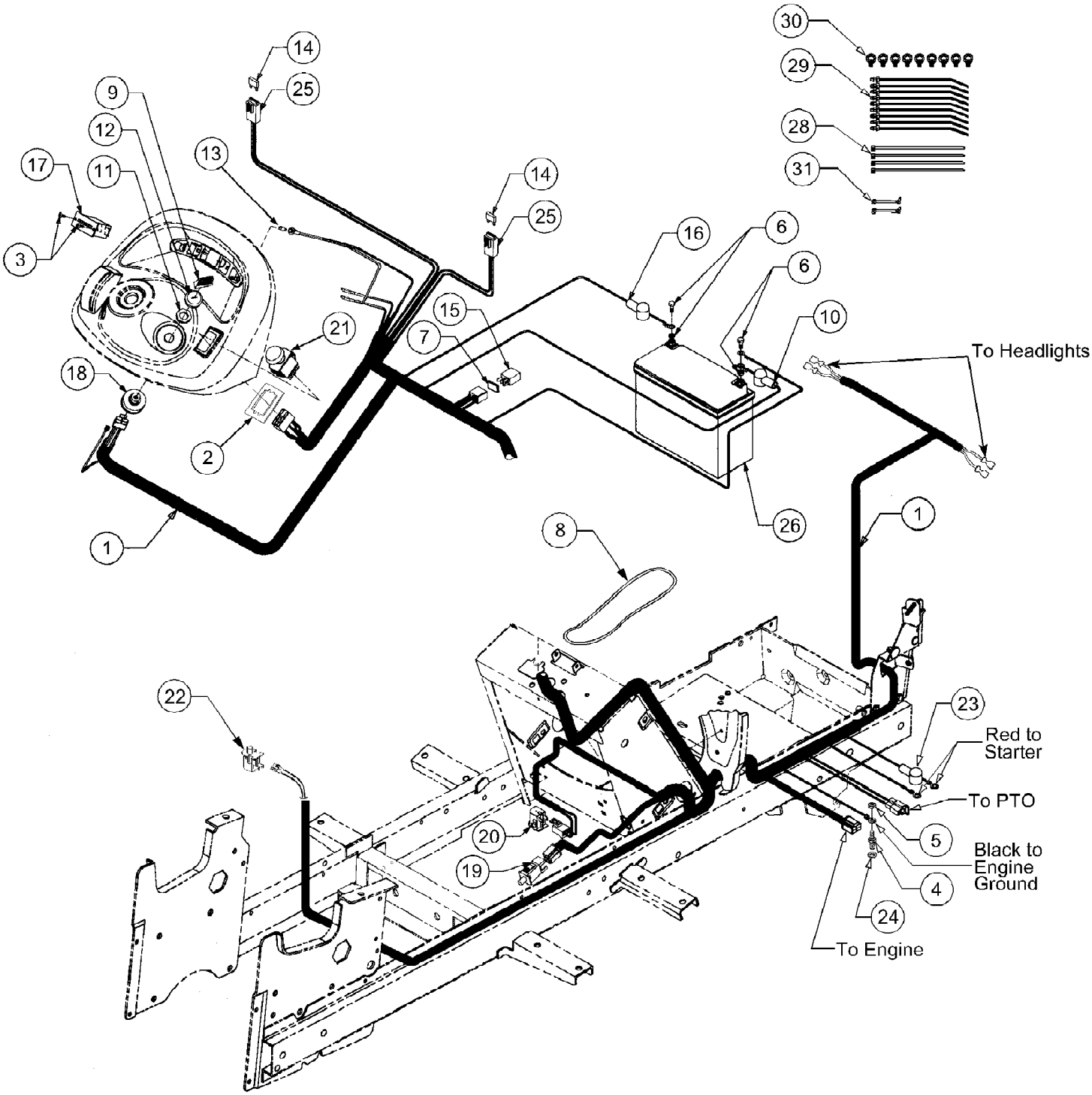

www.mymowerparts.com

For Discount Cub Cadet Parts Call 606-678-9623 or 606-561-4983

Ref #	Part Number	Qty	S/P/F	Description
1	629-3068A	1	S	Wire Harness, Main
2	783-0462	1	/P	Bracket, PTO Switch Retainer
3	710-0936	A/R		Screw, Truss Hd Tapp, #6 x .62
4	711-1094	1		Stud, Ground
5	712-3010	1	S	Nut, Hex, 5/16-18 GR5
6		1		Battery Cable Hardware
	710-3015	2	/P	Screw
	712-0271	2	/P	Sems Nut
7	721-0342	1	S	Gasket, Silicone
8	723-04016	1		Strap, Battery Retainer
9	759-3476A	1	S	Key, Ignition (Set of 2)
10	725-0340	1		Cover, Terminal Black
11	725-1346	1	S	Nut, Ignition Switch
12	725-1347	1	/P	Cap, Ignition Switch
13	725-1365	1	S	Bulb, Indicator
14	725-3243	2		Fuse, 25 Amp
15	725-1648	1	S	Relay
16	725-3007A	1	/P	Cover, Terminal Red
17	725-3159	1	S	Hour Meter
18	725-3163	1	S	Switch, Ignition
19	725-3164A	1	S	Switch, Interlock (Brake)
20	725-3166	1	S	Switch, Snap Mount - Normally Closed
21	725-3233	1	S	Switch, PTO
22	725-3166	1	S	Switch, Snap Mount Seat
23	725-3237	1		Cover, Terminal Red
24	736-0607	1	/P	Washer, External Lock, 5/16
25	729-0357	2		Holder, Fuse w/Mounting Clip
26	725-1707C	1	S	Battery
28	725-0157	4	/P	Tie, Self-Clinch Cable
29	726-0154	9	S	Tie, Pushmount
30	726-3055	9		Clip, Cable
31	726-0161	2		Clip, Wire

www.mymowerparts.com

For Discount Cub Cadet Parts Call 606-678-9623 or 606-561-4983

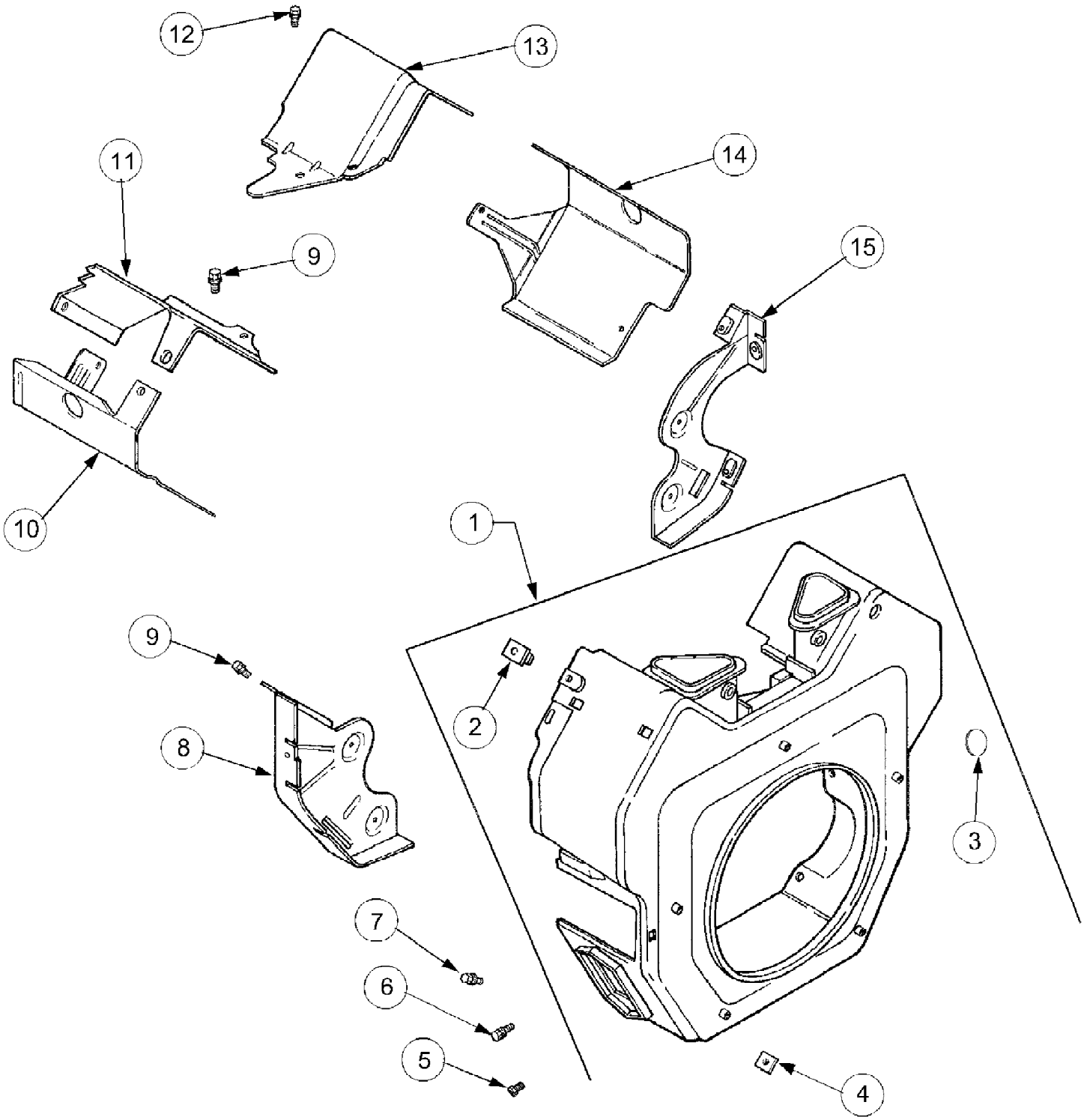

www.mymowerparts.com

For Discount Cub Cadet Parts Call 606-678-9623 or 606-561-4983

Ref #	Part Number	Qty	S/P/F	Description
1	KH-24-027-175-S	1	/P	Housing, Blower (Incl. Ref #2-4)
2	KH-24-100-02	2		Nut, Plastic
3	KH-25-139-16	1		Plug, Button, 9/16
4	KH-24-100-01	3		Nut, Plastic
5	KH-M-0551016	1		Screw, Hex Flange, M5 x 0.8 x 16
6	KH-M-545016-S	3	/P	Screw, Hex Flange, M5 x 0.8 x 16
7	KH-M-0545020	4	/P	Screw, Hex Flange, M5 x 0.8 x 20
8	KH-24-146-16-S	1	/P	Plate, Backing - #2 Side
9	KH-M-0645016	6	S	Screw, Hex Flange, M6 x 1.0 x 16
10	KH-24-063-20	1	/P	Baffle, Cylinder Barrel - #2 Side
11	KH-24-063-17	1	/P	Baffle, Valley - #2 Side
12	KH-M-0545010	2	/P	Screw, Hex Flange, M5 x 0.8 x 10
13	KH-24-063-59-S	1		Baffle, Valley - #1 Side
14	KH-24-063-58-S	1	S	Baffle, Cylinder Barrel - #1 Side
15	KH-24-146-20-S	1	/P	Plate, Backing - #1 Side

www.mymowerparts.com

For Discount Cub Cadet Parts Call 606-678-9623 or 606-561-4983

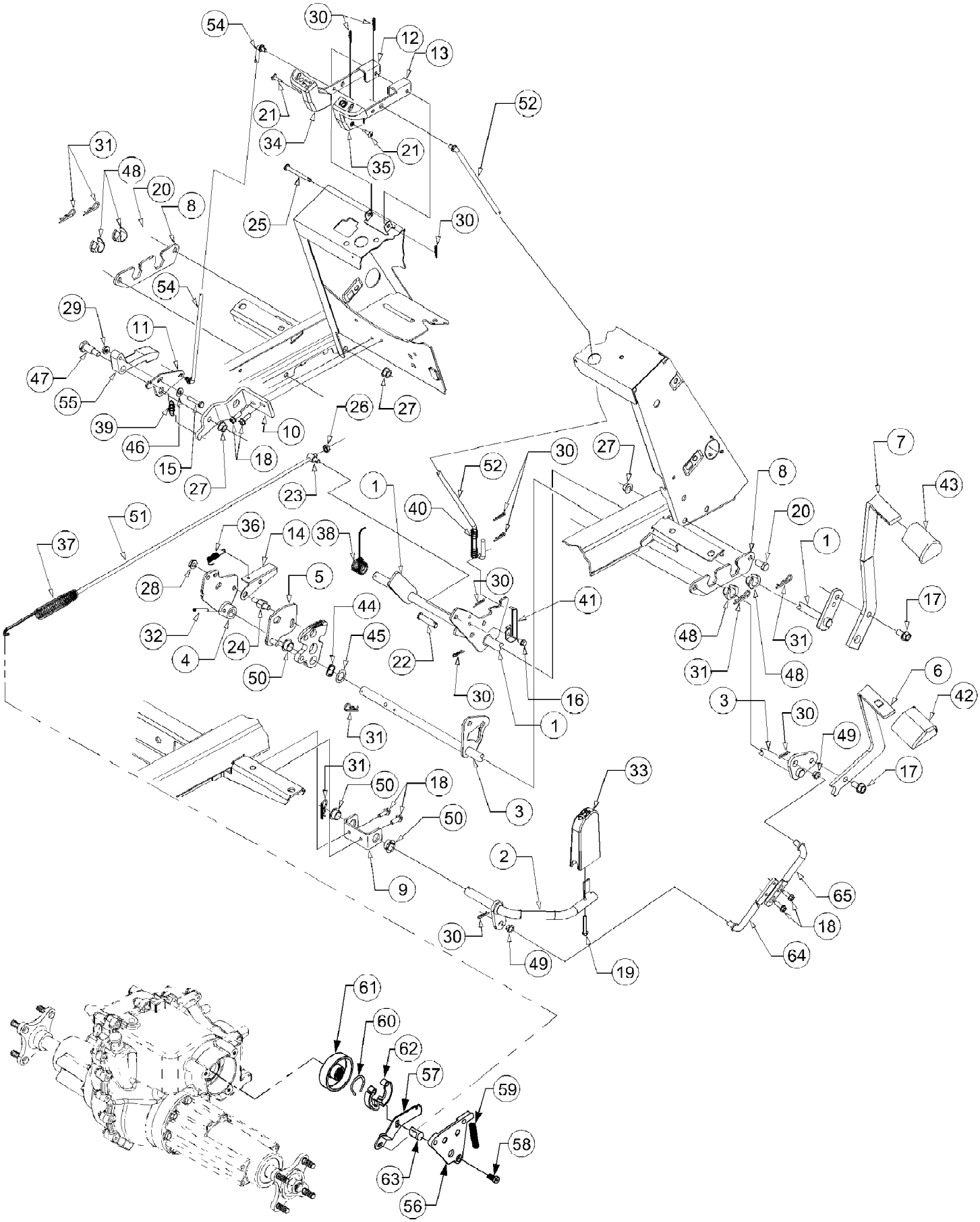

www.mymowerparts.com

For Discount Cub Cadet Parts Call 606-678-9623 or 606-561-4983

Ref #	Part Number	Qty	S/P/F	Description
1	603-0321A	1		Shaft Assy, Brake
2	603-0412	1		Pedal Assy, Reverse
3	603-0697	1		Shaft Assy, Forward/Reverse
4	603-0419	1		Cam Assy, Control
5	603-0421A	1	/P	Plate Assy, Disengagement
6	703-2570A	1		Pedal, Forward
7	703-2573A	1		Pedal, Brake
8	703-2804	2		Plate, Bearing Mounting
9	703-2938	1		Bracket, Reverse Pivot
10	703-2941	1		Bracket, Cruise
11	703-2942	1		Plate, Rod Adjustment
12	703-2962	1		Lever, Cruise
13	703-2963	1	S	Lever, Brake Lock
14	703-2965	1	S	Actuator, Reverse Switch
15	710-0106	1	/P	Screw, Hex Cap, 1/4-20 x 1.25
16	710-0599	1	/P	Screw, Hex Wash Hd Tapp 1/4-20 x .5
17	710-0623	2	/P	Screw, Hex Wash Hd Tapp 3/8-16x .75
18	710-0642	6	/P	Screw, Hex Wash Hd Tapp 1/4-20x .75
19	710-0796	1	/P	Screw, Truss Mach, #12 x 1.5
20	710-0216	2	/P	Screw, Hex Cap, 3/8-16 x .75 GR5
21	710-3009	2	/P	Screw, Phil Hd Pan, #10-24 x .75
22	711-0415	1	S	Pin, Clevis, 3/8 x 1.62
23	711-0736	1	/P	Ferrule, Adjustment, 1/4-20 Thrd
24	711-1138	1		Stud, Actuator
25	711-3295	1	S	Pin, Clevis, .25 x 2.38
26	712-0271	1	/P	Nut, Hex Sems, 1/4-20
27	712-0431	3	S	Nut, Hex Flange Lock, 3/8-16
28	712-3004A	1	/P	Nut, Hex Flange Lock, 5/16-18
29	712-3027	1	S	Nut, Hex Flange Lock, 1/4-20
30	714-0104	9	S	Pin, Internal Cotter, 5/16 Dia x 1.12
31	714-0145	6	S	Pin, Internal Cotter, 3/8 Dia x 1.62
32	715-0114	1	S	Pin, Spiral Spring, 1/4 x 1.5
33	731-3205	1	S	Pedal, Reverse
34	731-3206	1		Knob, Cruise
35	731-3207	1		Knob, Brake Lock
36	732-0418	1		Spring, Extension, .38 OD x 2.1
37	732-0463A	1	/P	Spring, Extension
38	732-0756A	1	S	Spring, Torsion
39	732-04006	1	S	Spring, Extension, .6 OD x 1.34
40	732-3099	1		Spring, Compression, .50 x 2.23
41	732-3117	1		Spring, Switch Actuator
42	735-3048	1		Pad, Forward Foot Control
43	735-3049	1	S	Pad, Brake Foot
44	736-0174	1	/P	Washer, Wave, .625 x .885 x .015
45	736-0349	1	S	Washer, Flat, .635 x 1.0 x .020
46	736-0463	1	S	Washer, Flat, 1/4 x .63 x .051
47	738-0145	1	S	Shoulder Bolt, .50 OD x .840
48	741-3065B	4	/P	Bearing, Hex Flange Split
49	741-3073	2	S	Bearing, Flange, .375 x .58 x .25
50	741-3074	3		Bearing, Flange, .626 x .93 x .344
51	747-3216	1		Rod, Brake
52	747-3219	1		Rod, Parking Brake
54	747-3307	1		Rod, Cruise

www.mymowerparts.com

For Discount Cub Cadet Parts Call 606-678-9623 or 606-561-4983

Ref #	Part Number	Qty	S/P/F	Description
55	748-3060	1		Latch, Cruise
56	618-3060	1	S	Plate, Brake
57	703-2191	1		Arm, Brake
58	710-3262	1		Screw, Low Hd Cap, 3/8-16 x .75
59	732-0152	1		Spring, Compression
60	732-3077	1		Spring, Brake
61	761-3019	1		Drum, Brake
62	761-3020	1	S	Shoe, Brake
63	761-3028	1		Actuator, Brake Shoe
64	747-3341A	1	/P	Rod, Rear Connecting
65	747-3383	1	/P	Rod, Front Connecting

www.mymowerparts.com

For Discount Cub Cadet Parts Call 606-678-9623 or 606-561-4983

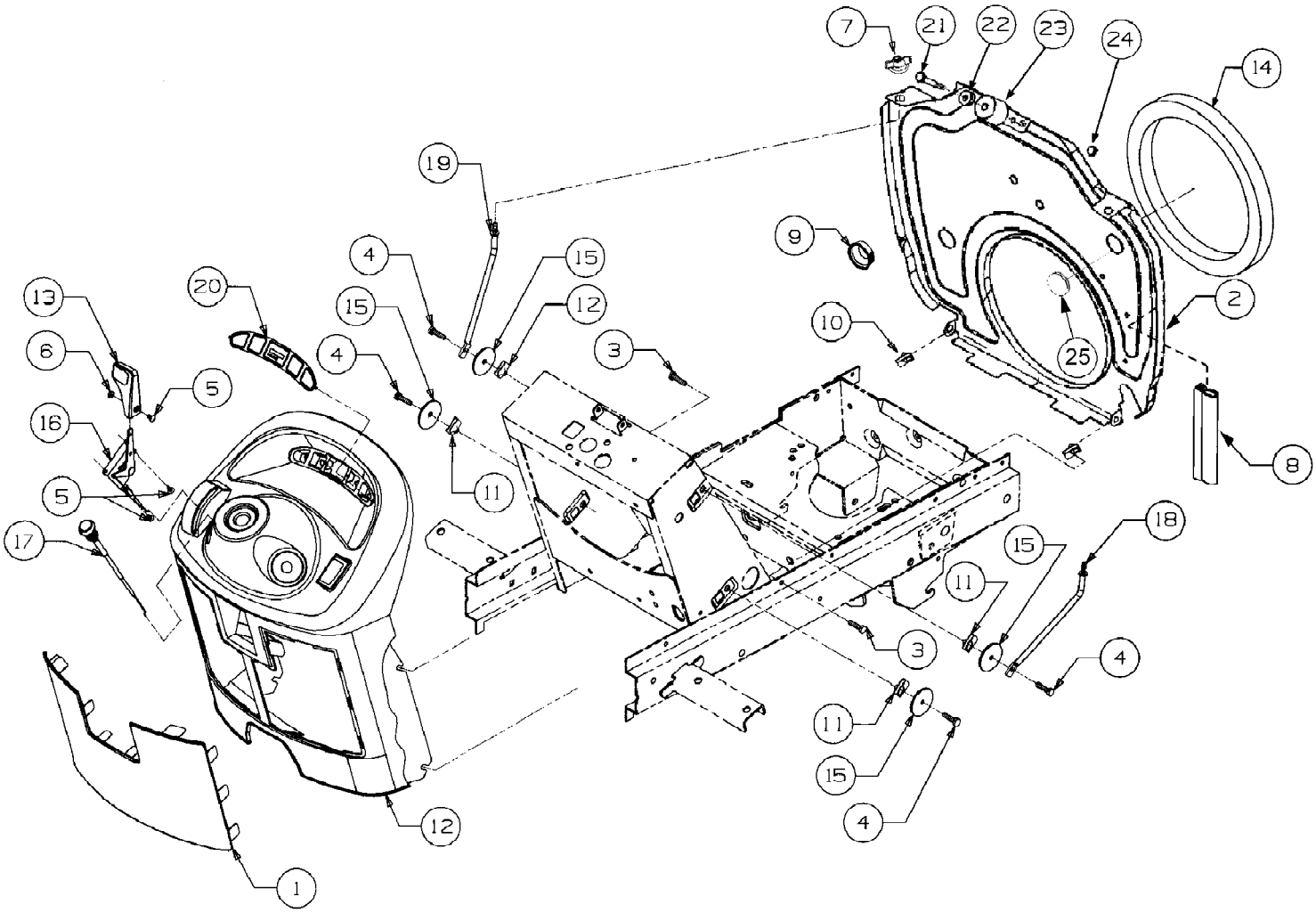

www.mymowerparts.com

For Discount Cub Cadet Parts Call 606-678-9623 or 606-561-4983

Ref #	Part Number	Qty	S/P/F	Description
1	703-2557	1	S	Screen, Intake Dash
2	703-3108B	1	S	Bulkhead, Lower
3	710-0751	2	/P	Screw, Hex Cap, 1/4-20 x .625
4	710-0597	4	/P	Screw, Hex Cap, 1/4-20 x 1.0
5	710-3217	3	/P	Screw, Cross Rec Trus, #8-32 x .38
6	712-0142	1	/P	Nut, #8-32
7	712-0397	2	S	Nut, Wing w/Bell Washer 1/4-20
8	720-3024-36	28in	/P	Seal, Push On Trim
9	723-3042	1	/P	Bushing, Snap, 7/8 ID
10	726-3048	2		Nut, U-Type Speed, 1/4-20
11	726-3054	4		Nut, U-Clip, 1/4-20
12	731-3137A	1	/P	Panel, Dash
	777I20306	1	/P	Graphic, Ignition Switch
13	731-3161	1	S	Knob, Throttle
14	723-3062	1		Seal Ring, Foam
15	736-3128	4		Washer, Flat, .285 x 1.75 x .10
16	746-3049	1	S	Control, Throttle
17	746-3050A	1	S	Control, Choke
18	747-3226	1		Rod, RH Mounting
19	747-3227	1		Rod, LH Mounting
20	777I20312	1	/P	Label, Dash
21	710-0136	1	/P	Screw, Hex Cap,1/4-20 x 1.75 GR5
22	736-0342	1		Washer, Flat, .283 x .75 x .030
23	731-3232	1		Roller, Hood Latch
24	712-0271	1	/P	Nut, Hex Sems, 1/4-20
25	720-3025	1		Plug. Button

www.mymowerparts.com

For Discount Cub Cadet Parts Call 606-678-9623 or 606-561-4983

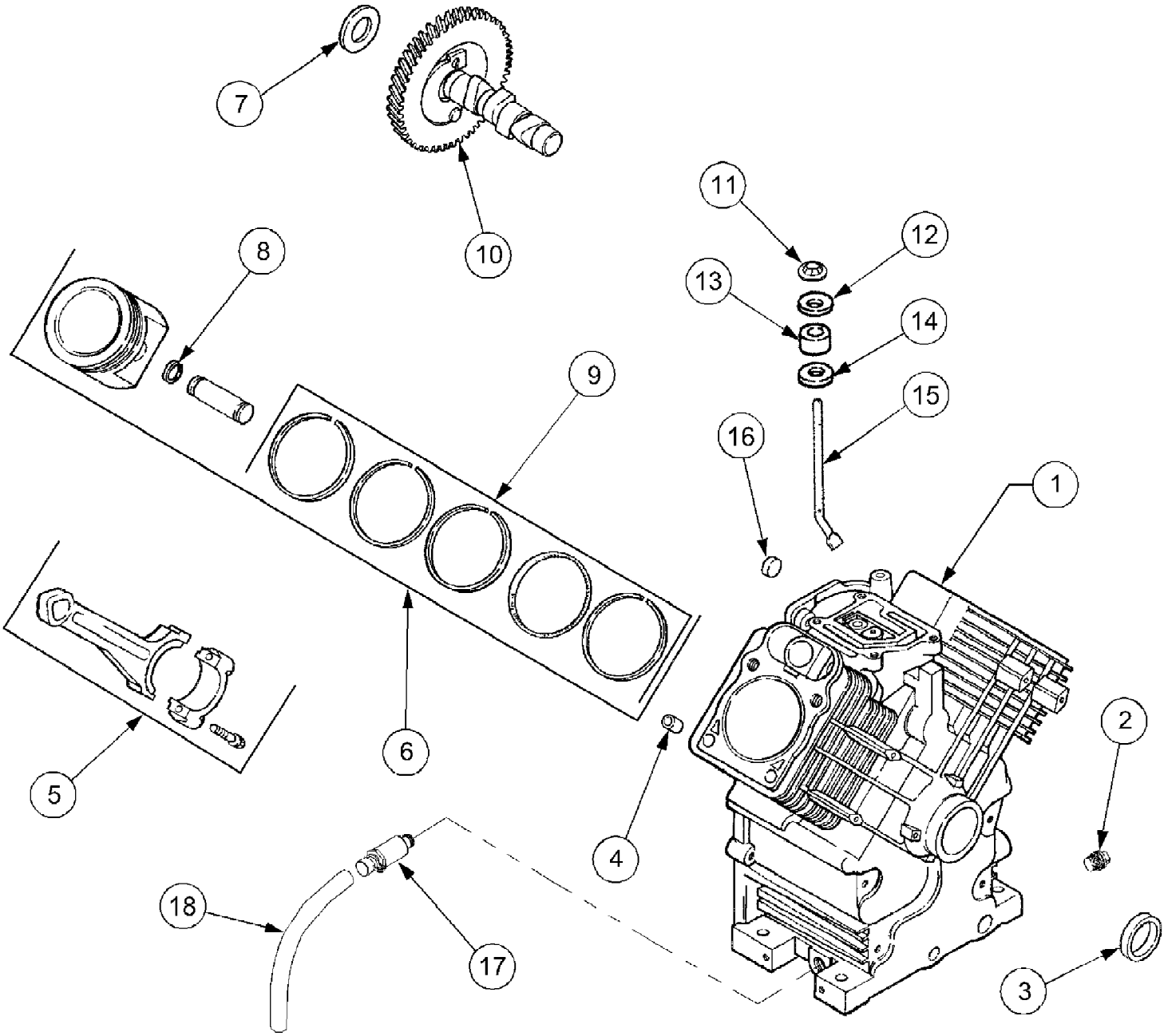

www.mymowerparts.com

For Discount Cub Cadet Parts Call 606-678-9623 or 606-561-4983

Ref #	Part Number	Qty	S/P/F	Description
	KH-64638	1	S	Complete Engine
	KH-24-522-180	1	/P	Short Block
1	KH-24-782-15	1	/P	Crankcase, (Use Miniblock)
2	KH-25-139-57-S	1	/P	Plug, Hex Hd, 3/8
3	KH-24-032-01	1	S	Seal, Front Oil
4	KH-24-380-13-S	6	S	Pin, Locating Dowel
5	KH-24-067-13	2	S	Rod, Connecting, Std
	KH-24-067-14-S	2	S	Rod, Connection, .010 / .25mm
6	KH-24-874-17-S	2	S	Piston w/Ring Set, Std
	KH-24-874-18-S	2	/P	Piston w/Ring Set, .010 / .25mm
	KH-24-874-19-S	2	S	Piston w/Ring Set, .020 / .50mm
	KH-24-874-14-S	2		Piston w/Ring Set, .08mm
7	KH-12-422-09	A/R	S	Shim, Camshaft, .0320 (Red)
	KH-12-422-13	A/R	S	Shim, Camshaft, .0400 (Black)
	KH-12-422-07	A/R	S	Shim, Camshaft, .0280 (White)
	KH-12-422-08	A/R	S	Shim, Camshaft, .0300 (Blue)
	KH-12-422-10	A/R	S	Shim, Camshaft, .0340 (Yellow)
	KH-12-422-11	A/R	S	Shim, Camshaft, .0360 (Green)
	KH-12-422-12	A/R	S	Shim, Camshaft, .0380 (Gray)
8	KH-24-018-01	4	S	Retainer, Piston Pin
9	KH-24-108-11-S	2	S	Ring Set, Std., .08
	KH-24-108-12-S	2	S	Ring Set, .010 / .25mm
	KH-24-108-13-S	2		Ring Set, .020 / .50mm
10	KH-24-012-10-S	1	/P	Camshaft Assembly
11	KH-24-018-09-S	1		Ring, Retainer
12	KH-M-931010-S	1		Washer, Nylon
13	KH-28-032-09-S	1		Seal, Governor Cross Shaft
14	KH-24-468-15-S	1		Washer, Plain
15	KH-24-144-38-S	1	/P	Shaft, Governor Cross
16	KH-52-139-09	1	S	Plug, Cup
17	751-3140	1	S	Drain, Oil
	751-3142	1		Cap
18	751-3141-12	1	S	Hose, Oil Drain
	KH-24-755-107-S	1	/P	Gasket Set

www.mymowerparts.com

For Discount Cub Cadet Parts Call 606-678-9623 or 606-561-4983

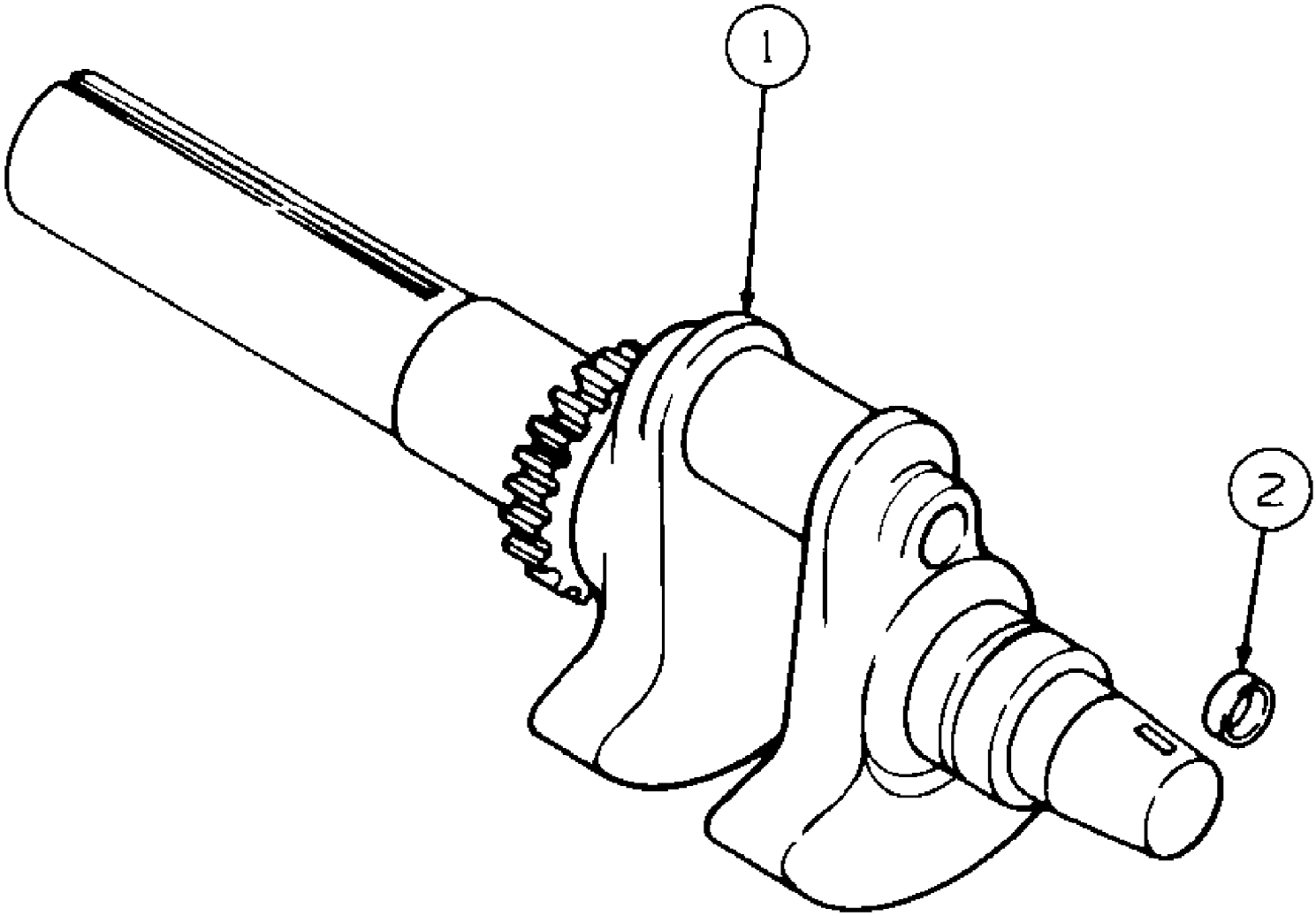

www.mymowerparts.com

For Discount Cub Cadet Parts Call 606-678-9623 or 606-561-4983

Ref #	Part Number	Qty	S/P/F	Description
1	KH-24-014-06	1	S	Crankshaft (Incl. Ref #2)
2	KH-52-139-09	1	S	Plug, Cup

www.mymowerparts.com

For Discount Cub Cadet Parts Call 606-678-9623 or 606-561-4983

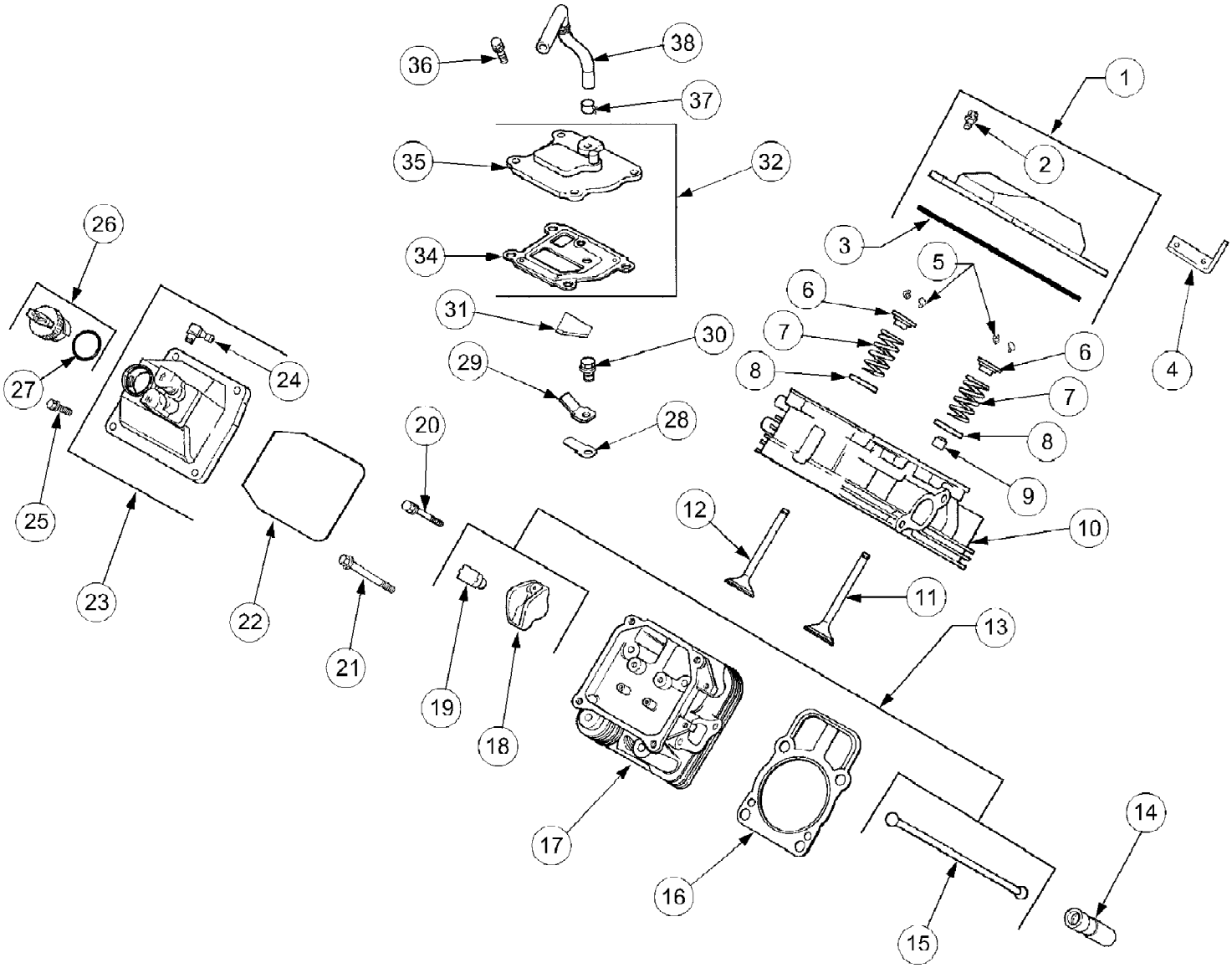

www.mymowerparts.com

For Discount Cub Cadet Parts Call 606-678-9623 or 606-561-4983

Ref #	Part Number	Qty	S/P/F	Description
1	KH-24-755-74	1	S	Kit, Valve Cover (Includes 2-3)
2	KH-24-086-32	4		Screw, Shoulder
3	KH-24-153-23-S	1	/P	O-Ring, Valve Cover
4	KH-24-445-01	1	S	Strap, Lifting
5	KH-12-755-03	4	/P	Kit, Retainer
6	KH-12-173-01	4	/P	Cap, Valve Spring
7	KH-24-089-02	4	/P	Spring, Valve
8	KH-235011	4	S	Retainer, Spring
9	KH-66-032-05-S	2	/P	Seal, Valve Stem
10	KH-24-318-68-S	1	S	Head Assembly, #1 Cylinder
11	KH-24-017-01	2	/P	Valve, Intake Std
	KH-24-017-02	2		Valve, Intake, .25mm
12	KH-24-016-01	2	/P	Valve, Exhaust Std
	KH-24-016-02	2		Valve, Exhaust, .25mm
13	KH-24-755-66	1	/P	Kit, Valve Train (Incl. 15,18,19)
14	KH-25-351-01	4	S	Lifter, Valve
15	KH-24-411-05	4	/P	Rod, Push
16	KH-24-841-01-S	2	/P	Kit, Cylinder Head Gasket
17	KH-24-318-71-S	1	S	Head Assembly, #2 Cylinder
18	KH-25-186-01	4	/P	Arm, Rocker
19	KH-24-599-01	4	S	Pivot, Rocker Arm
20	KH-M-0640034	1	/P	Screw, Hex Flng, M6 x 1.0 x 34
21	KH-12-086-16	8	S	Screw, Hex Flng, M10 x 1.5 x 90
22	KH-24-153-23-S	1	/P	O-Ring, Valve Cover
23	KH-24-559-03-S	1	S	Cover Kit, Fuel Pump Valve (Includes 22, 24, 26, 27)
24	KH-25-155-02	2	/P	Connector, 90°.
25	KH-24-086-34	4	/P	Screw, Shoulder
26	KH-24-227-02	1	S	Cap Assembly, Oil Fill (Incl. 27)
27	KH-24-153-09	1	S	O-Ring
28	KH-24-402-03	1	/P	Reed, Breather
29	KH-66-018-04-S	1	/P	Retainer, Breather Reed
30	KH-M-0545010	1	/P	Screw, Hex Flng, M5 x 0.8 x 10
31	KH-24-050-01	1	S	Filter, Breather
32	KH-24-033-01	1	/P	Kit, Breather (Includes 33-35)
34	KH-24-041-50-S	1	S	Gasket, Breather
35	KH-24-096-86-S	1	S	Cover, Breather
36	KH-M-0645020	4	S	Screw, Hex Flng M6 x 1.0 x 20
37	KH-25-237-14-S	1	/P	Clamp, Breather
38	KH-24-326-26	1	S	Hose, Breather

www.mymowerparts.com

For Discount Cub Cadet Parts Call 606-678-9623 or 606-561-4983

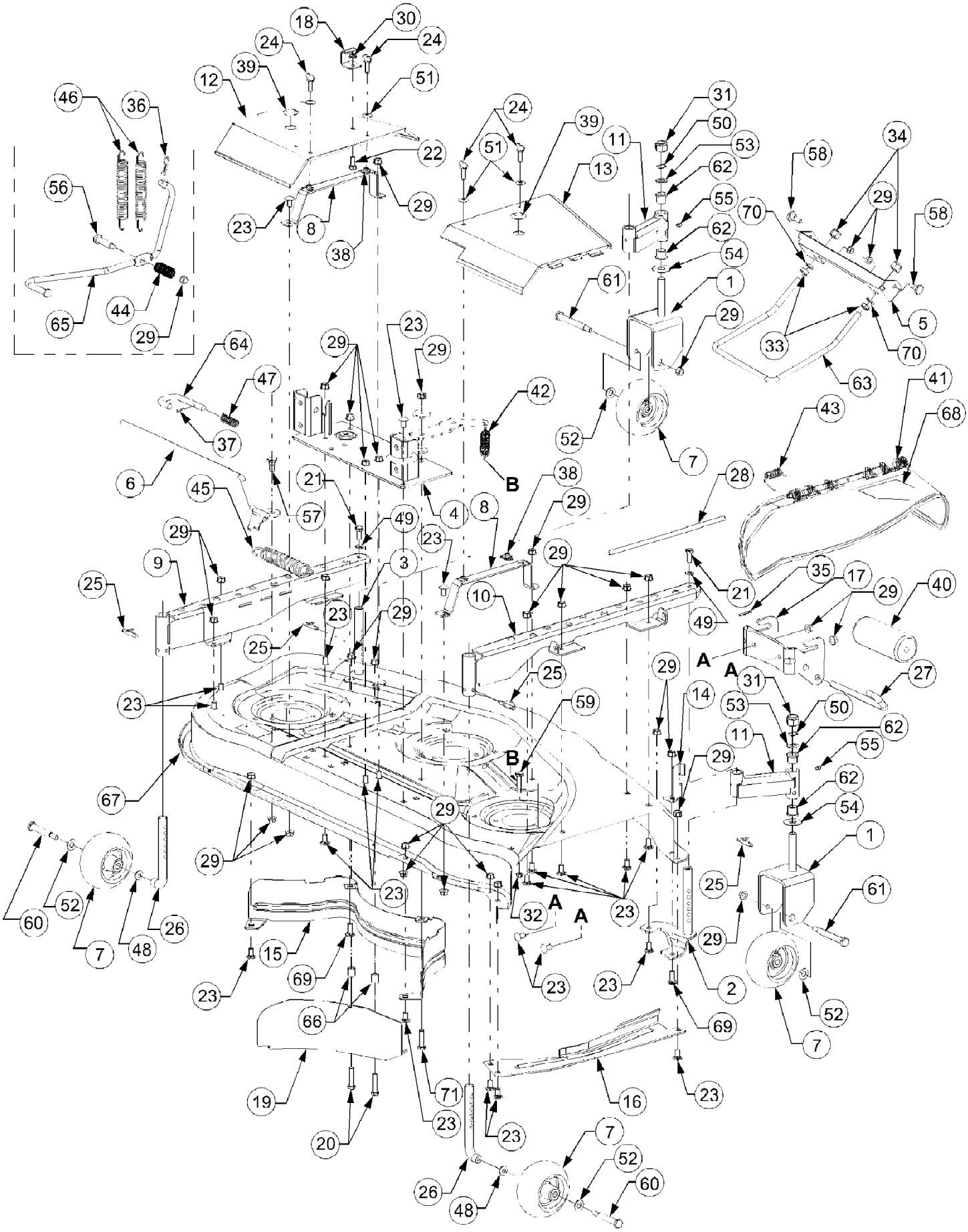

www.mymowerparts.com

For Discount Cub Cadet Parts Call 606-678-9623 or 606-561-4983

Ref #	Part Number	Qty	S/P/F	Description
1	603-0031A-0716	2	/P	Bracket, Caster Wheel
2	603-0110	1	/P	Spindle Assy, RH Front
3	603-0111	1		Spindle Assy, LH Front
4	603-0183A-0716	1	/P	Plate Assy, Mounting
5	703-2248	1	/P	Bracket, Front Lift
6	603-0203	1	S	Handle, Tension
7	703-1890A	4	/P	Wheel, Ball w/Fitting, 5 in
7	937-3000	4	/P	Fitting, Lube, 3/16 Drive Not shown
8	703-2072-0716	2		Strap, Mounting
9	703-2081A-0716	1	/P	Channel, LH Caster
10	703-2083-0716	1	/P	Channel, RH Caster
11	703-2094-0716	2		Caster Assembly, Front
12	703-2096C-0716	1	/P	Guard, LH Belt
13	703-3240-0716	1	/P	Guard, RH Belt
14	703-2121A	1	/P	Stop, Chute Deflector
15	703-2161-0637	1	/P	Baffle, Rear Inner
16	703-2192-0716	1	/P	Guard, Finger
17	703-2479-0716	1	/P	Bracket, Front Roller
18	703-2559-0716	1	/P	Bracket, Handle Stop
19	703-2607-0716	1		Baffle
20	710-0347	2	/P	Screw, Cap, 3/8-16 x 1.75 GR5
21	710-3001	2	/P	Screw, Cap,3/8-16 x .88 GR5
22	710-3008	1	/P	Screw, Cap, 5/16-18x .75 GR5
23	710-3178	24	/P	Bolt, Carriage, 3/8-16 x .75 GR5
24	710-3232	4	/P	Screw, Thumb Adj, 5/16-18 x 1
25	911-3266	4	/P	Pin, Clevis w/Ball Detent
26	711-3312	2		Axle, Deck Caster
27	911-3314	1	/P	Pin, Roller, 1/2 Dia x 7.31
28	711-1762	1		Pin, Hinge, .375 Dia x 14.06
29	912-0431	32	/P	Nut, Hex Flanged Lock, 3/8-16
30	712-3004A	1	/P	Nut, Hex Flanged Lock, 5/16-18
31	712-3016	2	/P	Nut, Hex Top Lock, 5/8-11 GR5
32	912-3027	1	/P	Nut, Hex Flange Lock, 1/4-20
33	912-3048	2	/P	Nut, Hex Jam, 1/2-13 GR5
34	712-3083	2	/P	Nut, Hex Top Nylon Lock, 1/2-13
35	914-0115	1	/P	Pin, Cotter, 1/8 Dia x 1
36	914-0145	1	/P	Pin, Int. Cotter, .092 Dia. x 1.63
37	715-3003	2	/P	Pin, Spirol, 3/16 x .75
38	926-0211	4	/P	U-Nut, 5/16-18
39	726-3045	2	/P	Plug, Button
40	731-3005	1	/P	Roller
41	931-3131A	1	/P	Deflector, Chute
42	932-0478	1	/P	Spring, Extension, .75 OD x 6.12
43	732-3070A	1	/P	Spring, Torsion
44	932-3094	1	/P	Spring, Compression, .63 ID x 2
45	732-0861	1		Spring, Extension, 1.25 OD x 7.2
46	932-3126	2	/P	Spring, Extension, .91 OD x 7.33
47	932-3127	2	/P	Spring, Compression
48	736-0105	2	/P	Washer, Bell, .380 x .88 x .062
49	936-0169	2	/P	Washer, Lock, 3/8
50	736-0174	2	/P	Washer, Wave, .625 x .885 x .015
51	736-0242	4	/P	Washer, Bell, .340 x .872 x .060
52	936-0272	4	/P	Washer, Flat, .510 x 1 x .060

www.mymowerparts.com

For Discount Cub Cadet Parts Call 606-678-9623 or 606-561-4983

Ref #	Part Number	Qty	S/P/F	Description
53	736-0290	2	/P	Washer, Flat, .63 x 1 x .063
54	736-3088	2		Washer, Flat, .635 x 1.585 x .062
55	937-3000	2	/P	Fitting, Lube, 3/16 Drive
56	738-0129	1	/P	Bolt, Shoulder
57	738-0143	1	/P	Bolt, Shoulder, .498 Dia x .340
58	938-0507B	2	/P	Bolt, Shoulder, .500 Dia x .434
59	938-0572	1	/P	Bolt, Shoulder, .374 Dia x 1.16
60	938-3056	2	/P	Bolt, Shoulder
61	938-3093	2	/P	Bolt, Step Shoulder
62	941-0353	4	/P	Bearing, Flange
63	747-3172C	1	/P	Rod, Front Lift
64	747-3188	2		Pin, Mower Support
65	747-3237A	1	/P	Rod, LH Lift Assist
66	750-0639	2	/P	Spacer, .437 ID x .625 OD x .75
67	759-3733-0716	1	/P	Deck Assembly w/Graphics
67	777S30014	1	/P	Graphic, Caution Spring Tension Not shown
67	777S30015	1		Graphic, Rider Danger Not shown
67	777S30503	1	/P	Graphic, Danger Not shown
68	977S30145	1	/P	Graphic, Danger
69	710-3168	2	/P	Bolt, Carriage, 3/8-16 x 1.0 GR5
70	936-0921	2	/P	Washer, Lock, 1/2
71	710-0520	1	/P	Screw, Cap, 3/8-16 x 1.5 GR5

www.mymowerparts.com

For Discount Cub Cadet Parts Call 606-678-9623 or 606-561-4983

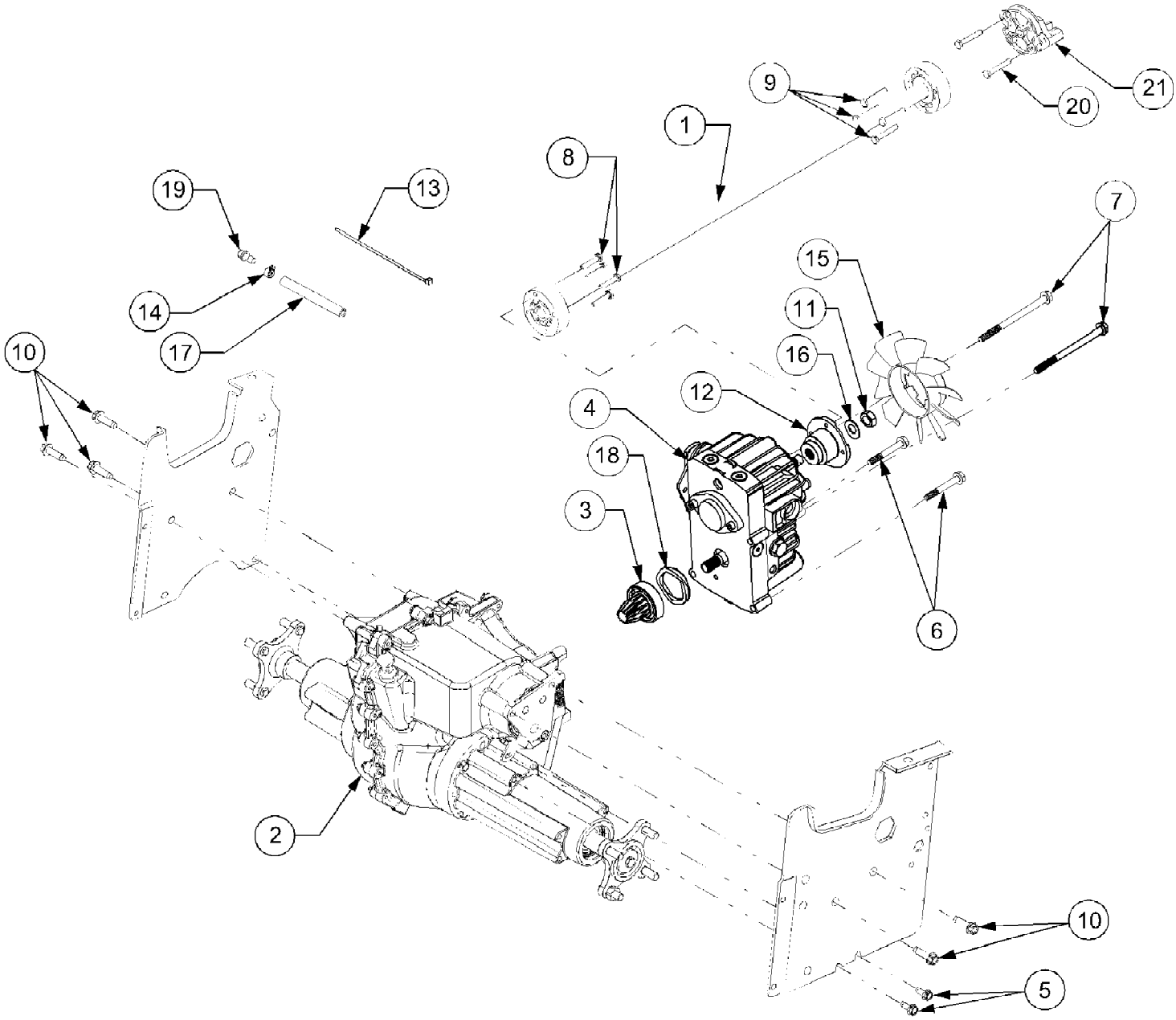

www.mymowerparts.com

For Discount Cub Cadet Parts Call 606-678-9623 or 606-561-4983

Ref #	Part Number	Qty	S/P/F	Description
1	718-3147	1		Shaft Assembly, Drive, 28.25 Lg
	759-3764	2	/P	Kit, Drive Barrel
2	618-04110	1	S	Transmission Assembly, Does NOT include wheel hub assemblies and brake spring
3	618-3088	1		Pinion Assembly, Input
	721-04093	1	S	Pump Gasket (Not Shown)
4	618-3243	1	S	Pump, Hydrostatic
5	710-1260A	2	/P	Screw, Hex Wsh Tap, 5/16-18 x .75
6	710-3180	2	/P	Screw, Hex Cap, 5/16-18 x 1.75 GR5
7	710-3195	2		Screw, Hex Cap, 5/16-18 x 4.5 GR5
8	710-1062	4		Screw, Hex Patch, 1/4-20 x 1.25 GR5
9	710-3288	4		Screw, Hex Patch, 1/4-20 x 1.62 GR5
10	710-3290	5		Screw, Hex Wsh Tap, 3/8-16 x 1.25
11	712-3059	1	/P	Nut, Hex Top Lock Jam GR5, 1/2-20
12	748-3093	1		Adapter, Pump
13	725-0157	1	/P	Tie, Self-Clinch Cable
14	726-0205	1	/P	Clamp, Hose
15	731-3297	1		Fan, 10 Blade Cooling
16	736-0253	1	S	Washer, Bell, 1/2 ID
17	759-3330	1	/P	Line, Fuel, 7in (10ft Bulk)
18	736-3099	1	S	Washer, Wave, 1.96 x 2.44 x .06
19	737-0296	1	/P	Vent
20	KH-24-086-16	2	S	Screw, Hex Patch, M10-1.50x 90mm
21	719-3096	1	/P	Adapter, Drive Shaft

www.mymowerparts.com

For Discount Cub Cadet Parts Call 606-678-9623 or 606-561-4983

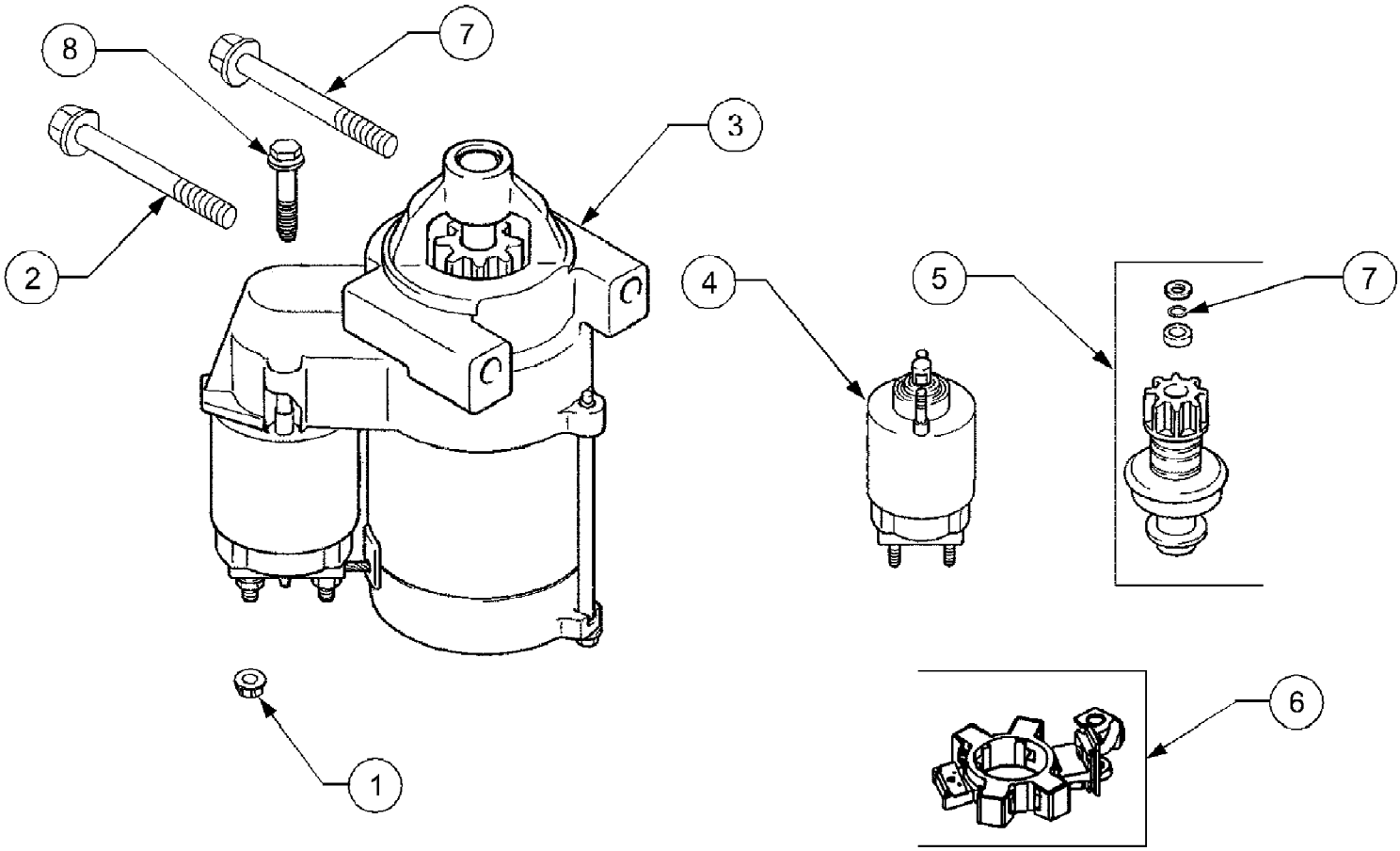

www.mymowerparts.com

For Discount Cub Cadet Parts Call 606-678-9623 or 606-561-4983

Ref #	Part Number	Qty	S/P/F	Description
1	KH-M-0841080	1	S	Nut, Hex Flange M8 x 1.25"
2	KH-M-839080	2	S	Screw, Hex Flange M8 x 1.25 x 80
3	KH-25-098-09-S	1	S	Starter, Solenoid Shift Assembly (Includes 4-6)
4	KH-25-435-04-S	1	/P	Kit, Solenoid
5	KH-25-755-33-S	1		Kit, Pinion Drive (Includes 6)
6	KH-25-221-01-S	1		Kit, Brush
7	KH-25-141-05-S	1		Ring, Retainer
8	KH-25-086-113-S	3		Screw, External Torx Hd.

www.mymowerparts.com

For Discount Cub Cadet Parts Call 606-678-9623 or 606-561-4983

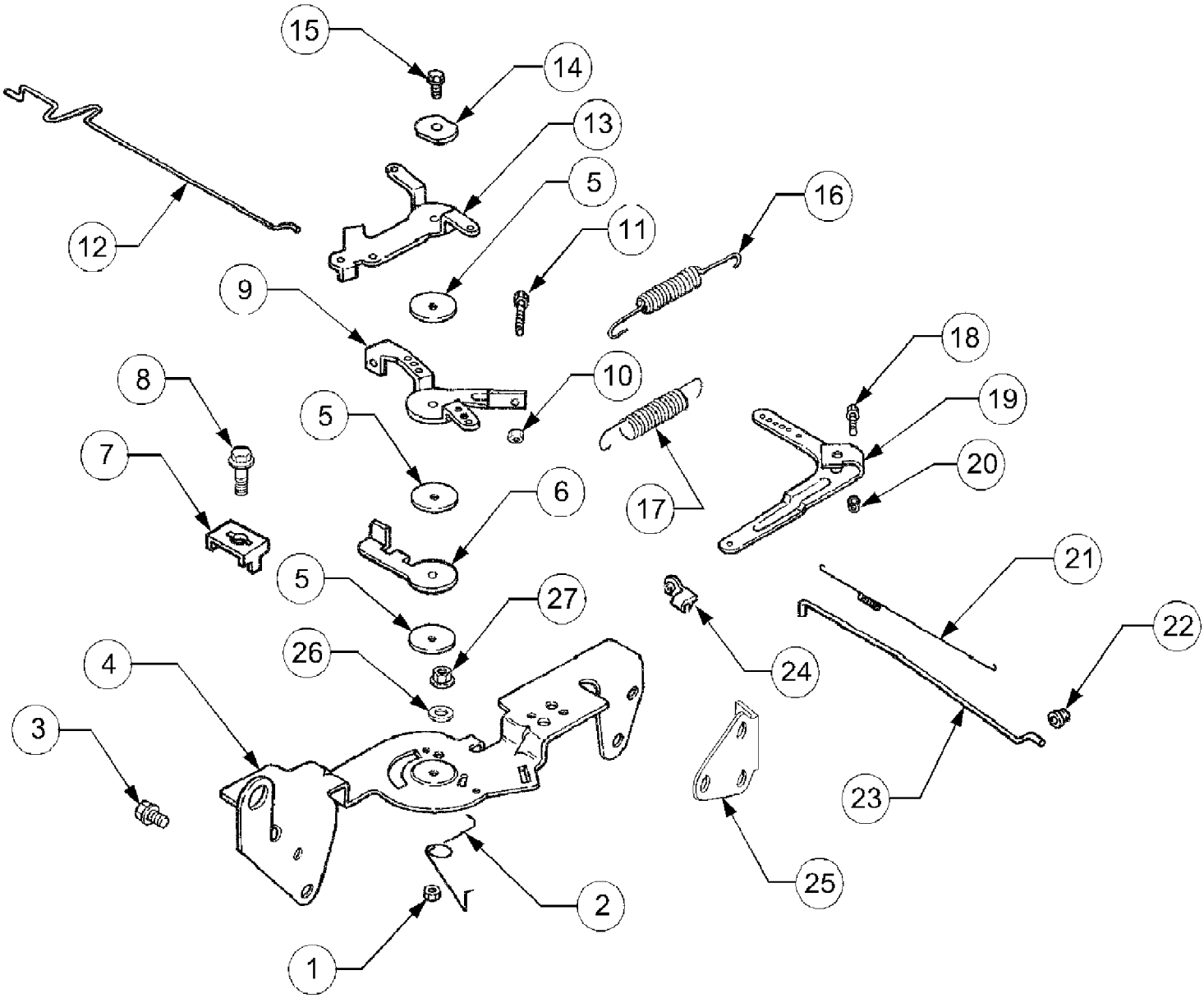

www.mymowerparts.com

For Discount Cub Cadet Parts Call 606-678-9623 or 606-561-4983

Ref #	Part Number	Qty	S/P/F	Description
1	KH-M-0547050	1	/P	Nut, Hex Lock M5 x 0.8
2	KH-24-089-03	1		Spring, Choke Return
3	KH-M-645016-S	4	/P	Screw, Hex Flange M6 x 1.0 x 16
4	KH-24-126-56	1	S	Bracket, Control
5	KH-24-468-01	3		Washer , Plain 5.5mm
6	KH-24-090-07	1	/P	Lever, Throttle Actuator
7	KH-12-237-01	2		Clamp, Cable
8	KH-M-545016-S	3	/P	Screw, Hex Flange M5 x 0.8 x 16
9	KH-24-090-13	1		Lever, Throttle Control
10	KH-M-446030-S	1	/P	Nut, Hex M4 x 0.7
11	KH-M-401030	1	/P	Screw, Hex Cap M4 x 0.7 x30
12	KH-24-079-21-S	1	/P	Linkage, Choke
13	KH-24-090-05	1		Lever, Choke
14	KH-41-468-03	1		Washer, Spring 1/4"
15	KH-M-0545020	1	/P	Screw, Hex Flange M5 x 0,.8 x 20
16	KH-24-089-51-S	1	/P	Spring, Throttle Limiter
17	KH-24-089-48-S	1		Spring, Governor
18	KH-24-211-03-S	1		Screw, Round Hd. Square Neck
19	KH-24-090-33-S	1	S	Lever, Governor
20	KH-M-0641060	1	S	Nut, Hex Flange M6 x 1.0
21	KH-24-089-01	1		Spring, Linkage
22	KH-25-158-08	1	/P	Bushing, Linkage Retaining
23	KH-24-079-01	1		Linkage, Throttle
24	KH-25-158-11	1	/P	Bushing, Linkage Retaining
25	KH-24-126-04	2	S	Bracket, Support
26	KH-X-20-1-S	1		Washer
27	KH-M-541050-S	1		Nut, Hex

www.mymowerparts.com

For Discount Cub Cadet Parts Call 606-678-9623 or 606-561-4983

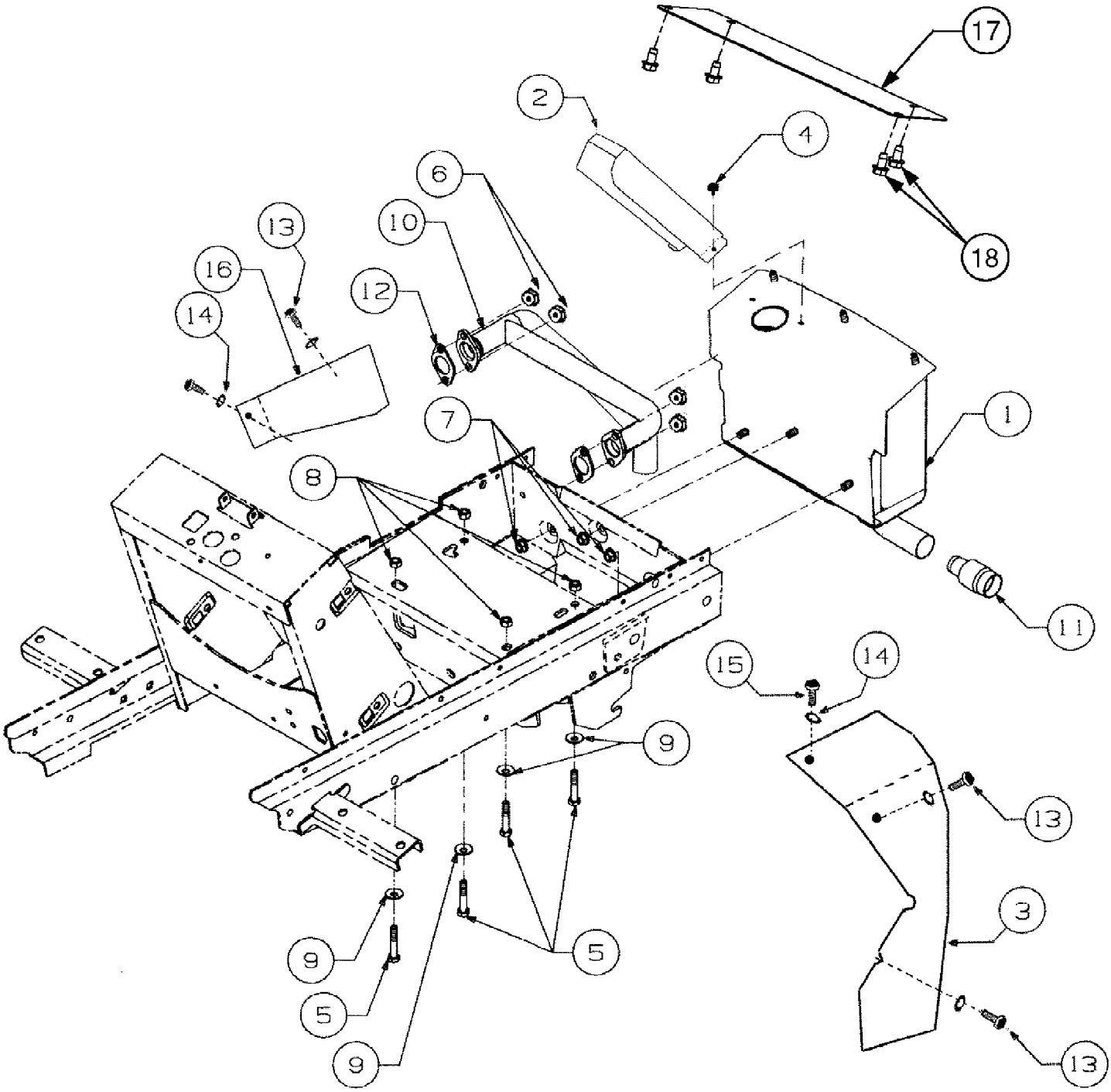

www.mymowerparts.com

For Discount Cub Cadet Parts Call 606-678-9623 or 606-561-4983

Ref #	Part Number	Qty	S/P/F	Description
1	651-3001	1	S	Muffler Assembly
2	703-3099A	1	/P	Shield, Muffler Tube
3	703-2632	1	S	Baffle, RH Heat
4	710-1268	2	/P	Screw, Hex Wsh Hd Tap, #10-16 x .38
5	710-0539	4	/P	Bolt, Eng Mount, 3/8-24 x 1.75 GR5
6	KH-M-0841080	4	S	Nut, Hex Flange
7	712-3004A	3	/P	Nut, Hex Flange Lock, 5/16-18
8	712-3054	4	/P	Nut, Hex Lock, 3/8-24
9	736-0105	4	/P	Washer, Bell, .380 x .88 x .062
10	751-10026	1		Tube, Exhaust
11	759-3744	1	S	Arrestor, Spark
12	KH-24-041-02	2	S	Gasket, Exhaust
13	710-3209	4		Screw, Hex Cap, M6 x 1 x 10
14	736-0142	5	S	Washer, Flat, .281 x .5 x .06
15	710-0351	1	/P	Screw, Truss Hd Tapp, #10 x .5
16	703-2631	1	S	Baffle, LH Heat
17	703-05474	1		Deflector, Heat
18	710-0599	4	/P	Screw, Hex Wsh. Hd. Tapp. 1/4-20 x .5

www.mymowerparts.com

For Discount Cub Cadet Parts Call 606-678-9623 or 606-561-4983

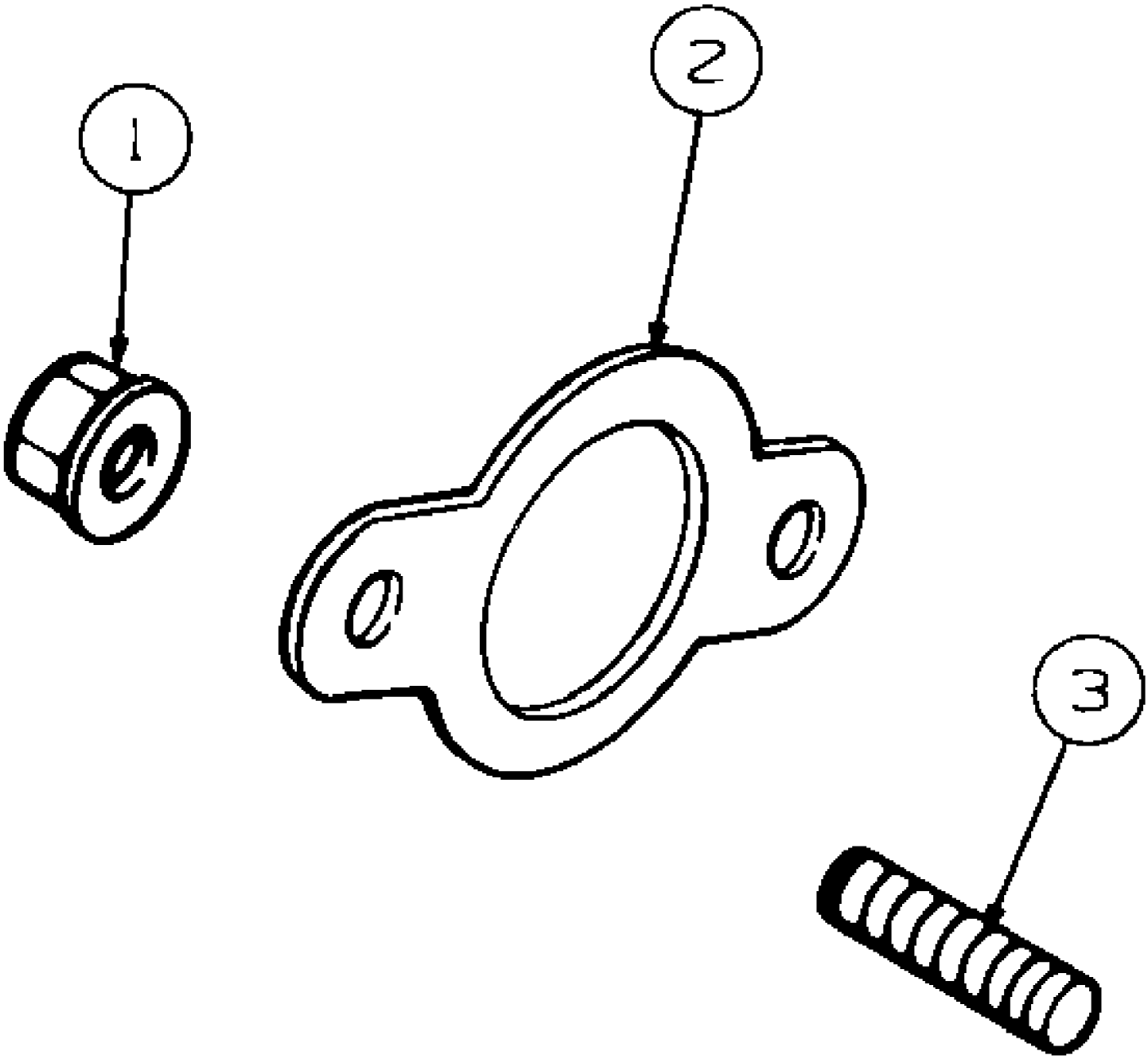

www.mymowerparts.com

For Discount Cub Cadet Parts Call 606-678-9623 or 606-561-4983

Ref #	Part Number	Qty	S/P/F	Description
1	712-3086	4	/P	Nut, Muffler Mounting, M8 x 1.25
2	721-0377	2	S	Gasket, Exhaust
3	KH-25-072-04	4	/P	Stud, Exhaust, M8 x 1.25 x 33

www.mymowerparts.com

For Discount Cub Cadet Parts Call 606-678-9623 or 606-561-4983

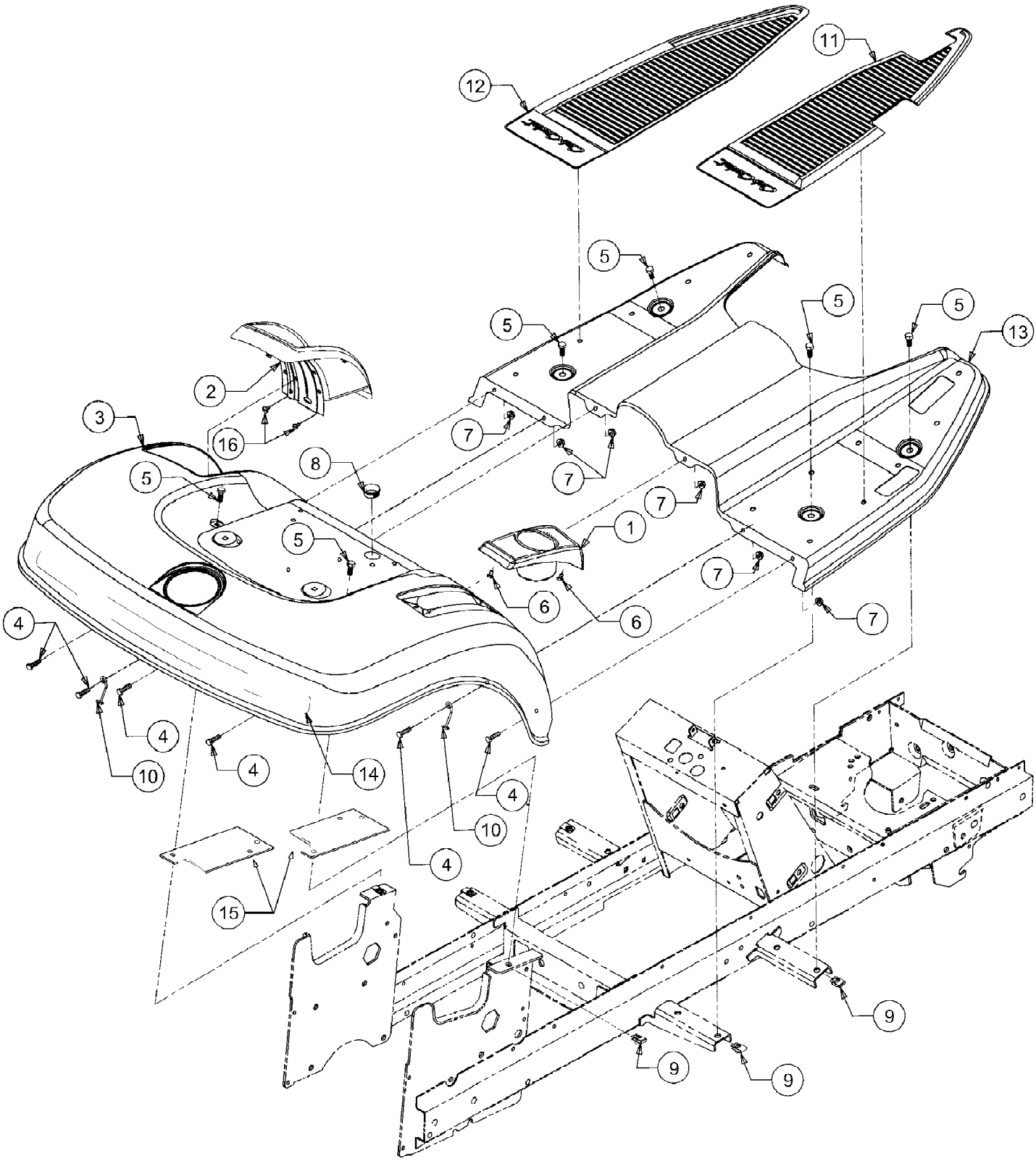

www.mymowerparts.com

For Discount Cub Cadet Parts Call 606-678-9623 or 606-561-4983

Ref #	Part Number	Qty	S/P/F	Description
1	731-3212A	1	/P	Cup Holder
2	631-3002	1		Cover, Implement Lift
3	703-2278B	1		Fender
4	710-0751	6	/P	Screw, Hex Cap, 1/4-20 x .62 GR5
5	710-1260A	6	/P	Screw, Hex Wash Hd Tapp 5/16-18 x .750
6	710-1268	2	/P	Screw, Hex Tapp, #10 x .38 Lg
7	712-3027	6	S	Nut, Hex Flange Lock, 1/4-20
8	723-3042	1	/P	Bushing, Snap, 7/8 ID
9	726-0211	6	S	U-Nut, 5/16-18
10	732-3122	2		Retainer, Hook
11	735-3046A	1	/P	Pad, RH Foot
12	735-3047	1		Pad, LH Foot
13	703-2279	1		Running Board w/Graphic
	777S30170	1	/P	Graphic, Warning
14	777D07926	1		Graphic, Rear Fender
15	703-2628	2		Bracket, Fender Reinforcement
16	710-0224	4	S	Screw, Hex Tapp, #10-16 x .5 Lg.

www.mymowerparts.com

For Discount Cub Cadet Parts Call 606-678-9623 or 606-561-4983

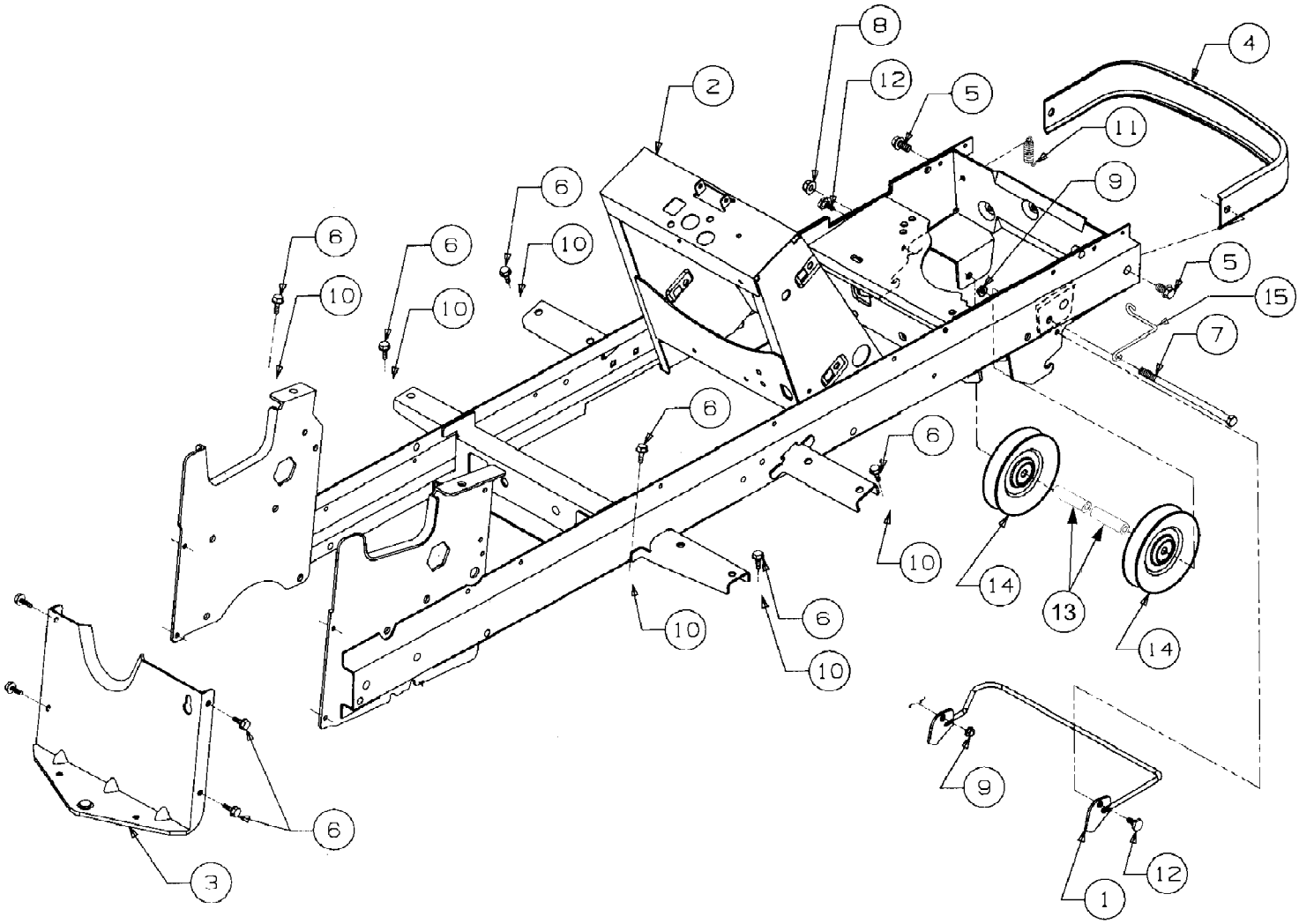

www.mymowerparts.com

For Discount Cub Cadet Parts Call 606-678-9623 or 606-561-4983

Ref #	Part Number	Qty	S/P/F	Description
1	603-0132	1	S	Rod, Quick Attach
2	603-0329C	1		Frame
3	703-2257	1		Drawbar
3	777I20296	1		Graphic, Transmission Release Lever Not shown
4	703-2577	1	S	Bumper
5	710-0623	2	/P	Screw, Hex Wsh Hd Tapp 3/8-16 x .75
6	710-1260A	10	/P	Screw, Hex Wsh Hd Tap 5/16-18 x .75
7	710-3261	1		Screw, Hex Cap, 3/8-16 x 7.0
8	712-0431	1	S	Nut, Hex Flange Lock, 3/8-16
9	712-3027	2	S	Nut, Hex Flange Lock, 1/4-20
10	726-0211	6	S	U-Nut, 5/16-18
11	732-3002	1	S	Spring, Latch
12	738-0255	2	S	Bolt, Shoulder
13	750-04198	2		Spacer, Idler, .411 x .720 x 2.19
14	756-3045	2	S	Pulley, Idler
15	732-0970	1	S	Belt Guide

www.mymowerparts.com

For Discount Cub Cadet Parts Call 606-678-9623 or 606-561-4983

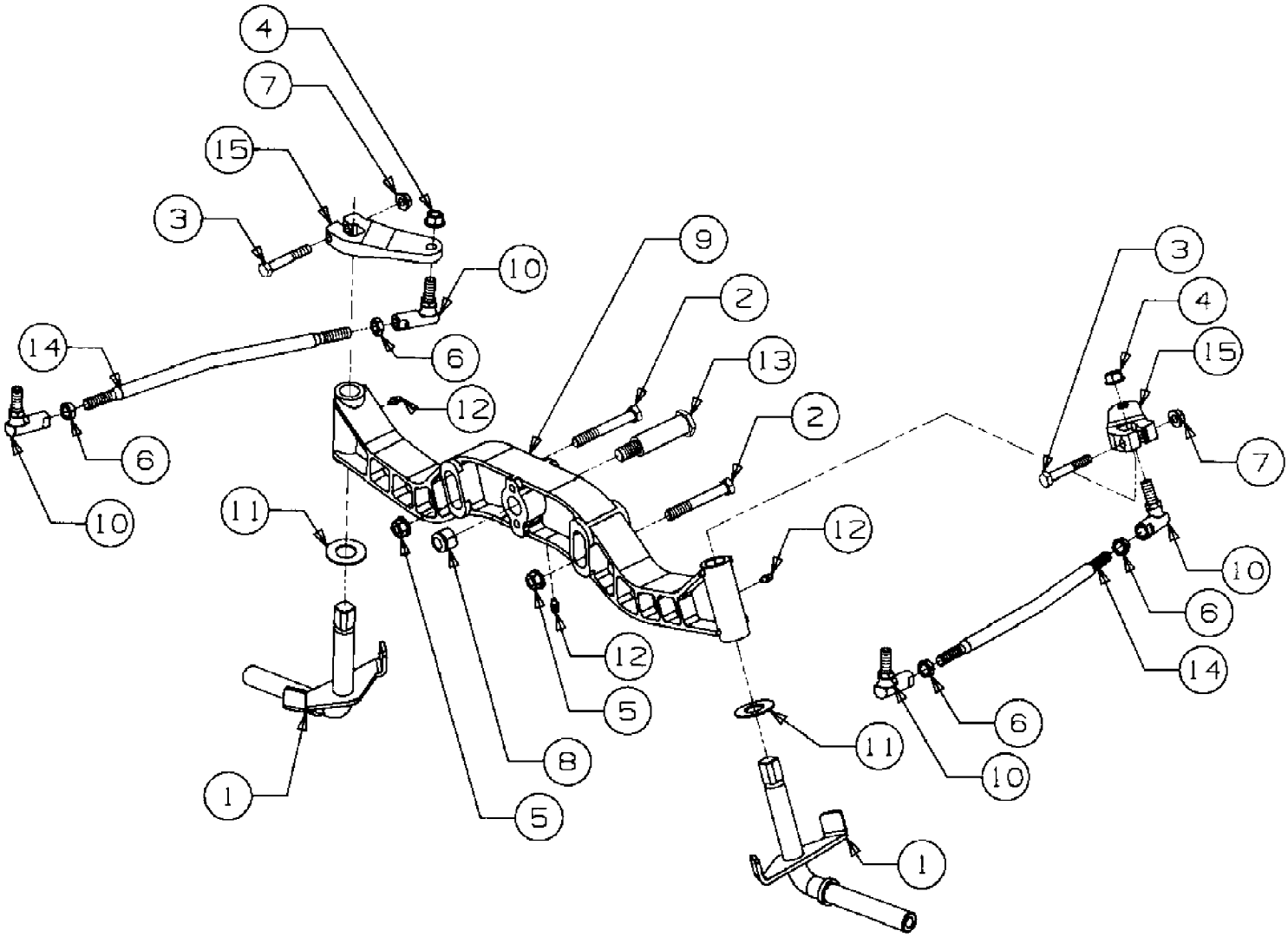

www.mymowerparts.com

For Discount Cub Cadet Parts Call 606-678-9623 or 606-561-4983

Ref #	Part Number	Qty	S/P/F	Description
1	603-0066	2		Knuckle Assembly, Steering
2	710-3066	2	/P	Screw, Hex Cap, 3/8-16 x 2.75 GR8
3	710-3103	2	/P	Screw, Hex Cap, 5/16-18 x 2 GR5
4	712-3054	2	/P	Nut, Hex Lock, 3/8-24 GR5
5	712-0431	2	S	Nut, Hex Flanged Lock, 3/8-16
6	712-0711	4	/P	Nut, Hex Jam, 3/8-24 GR2
7	712-3004A	2	/P	Nut, Hex Flange Top Lock, 5/16-18
8	712-3083	1	/P	Nut, Hex Top Nylon Lock, 1/2-13
9	719-3095	1		Axle, Front Pivot
10	723-0156	4	S	Joint, Ball, 3/8-24
11	736-0188	2	/P	Washer, Flat, .760 x 1.49 x .06 Thk.
12	737-3000	3	S	Fitting, Lube, 3/16 Drive Type
13	738-3110	1	S	Bolt, Pivot Shoulder, 3/4 Dia x 2.23
14	747-3171	2		Rod, Tie
15	748-3049	2		Arm, Steering

www.mymowerparts.com

For Discount Cub Cadet Parts Call 606-678-9623 or 606-561-4983

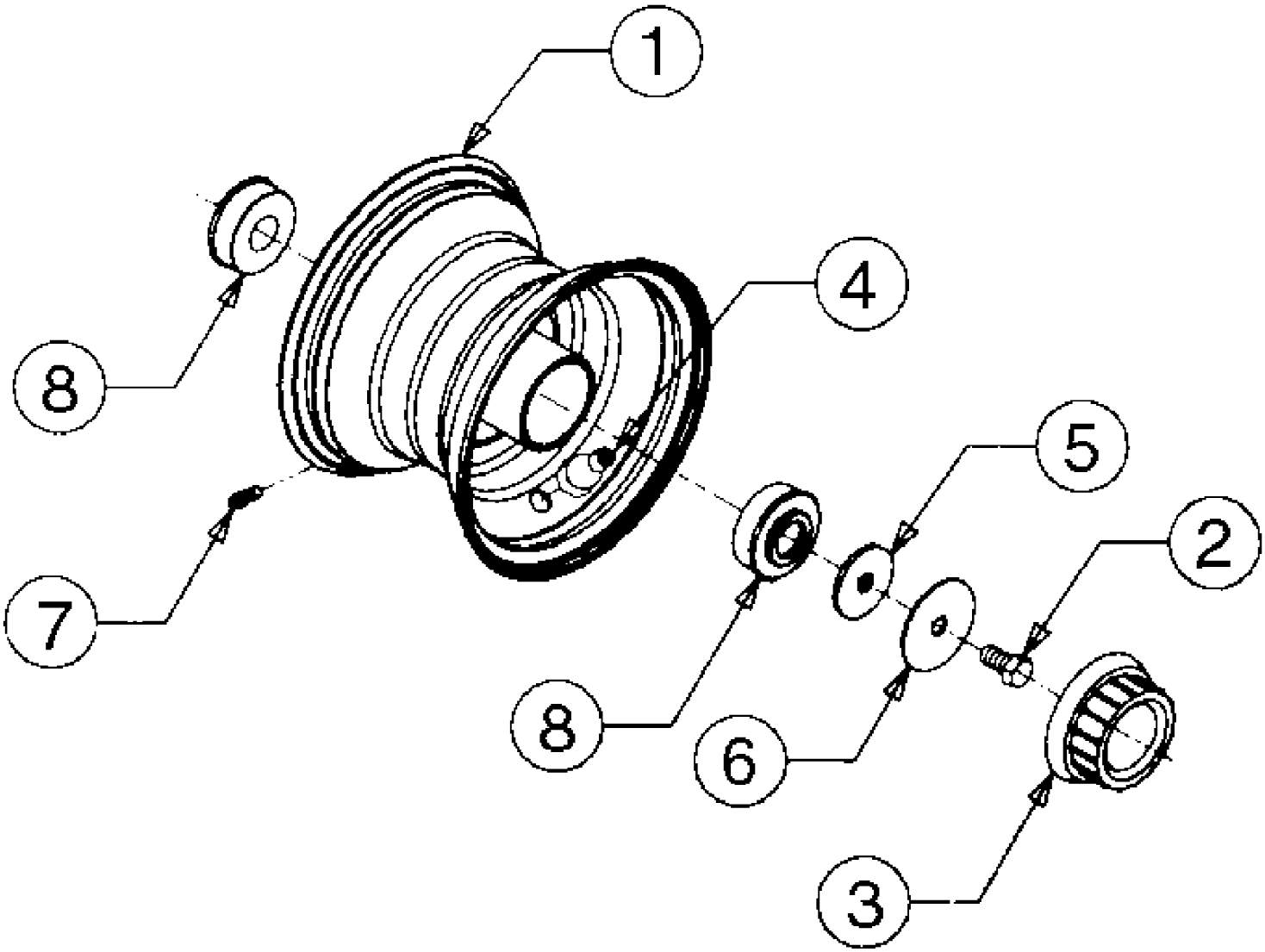

www.mymowerparts.com

For Discount Cub Cadet Parts Call 606-678-9623 or 606-561-4983

Ref #	Part Number	Qty	S/P/F	Description
	734-3187	2	S	Tire, Cub Tread, 16 x 6.5 x 8
1	634-3016	2	S	Rim Assy, Front
2	710-3119	2	/P	Bolt, Hex Patch, 3/8-16 x .75 GR5
3	731-3020	2	S	Cap, Hub
4	734-0255	2	S	Valve, Tubeless Air
5	736-3039	2	S	Washer, Flat, .406 x 1.5 x .110
6	736-3040	2	/P	Washer, Flat, .406 x 1.92 x .06
7	737-0224	2		Fitting, Grease
8	741-3032	4	S	Bearing, Ball

www.mymowerparts.com

For Discount Cub Cadet Parts Call 606-678-9623 or 606-561-4983

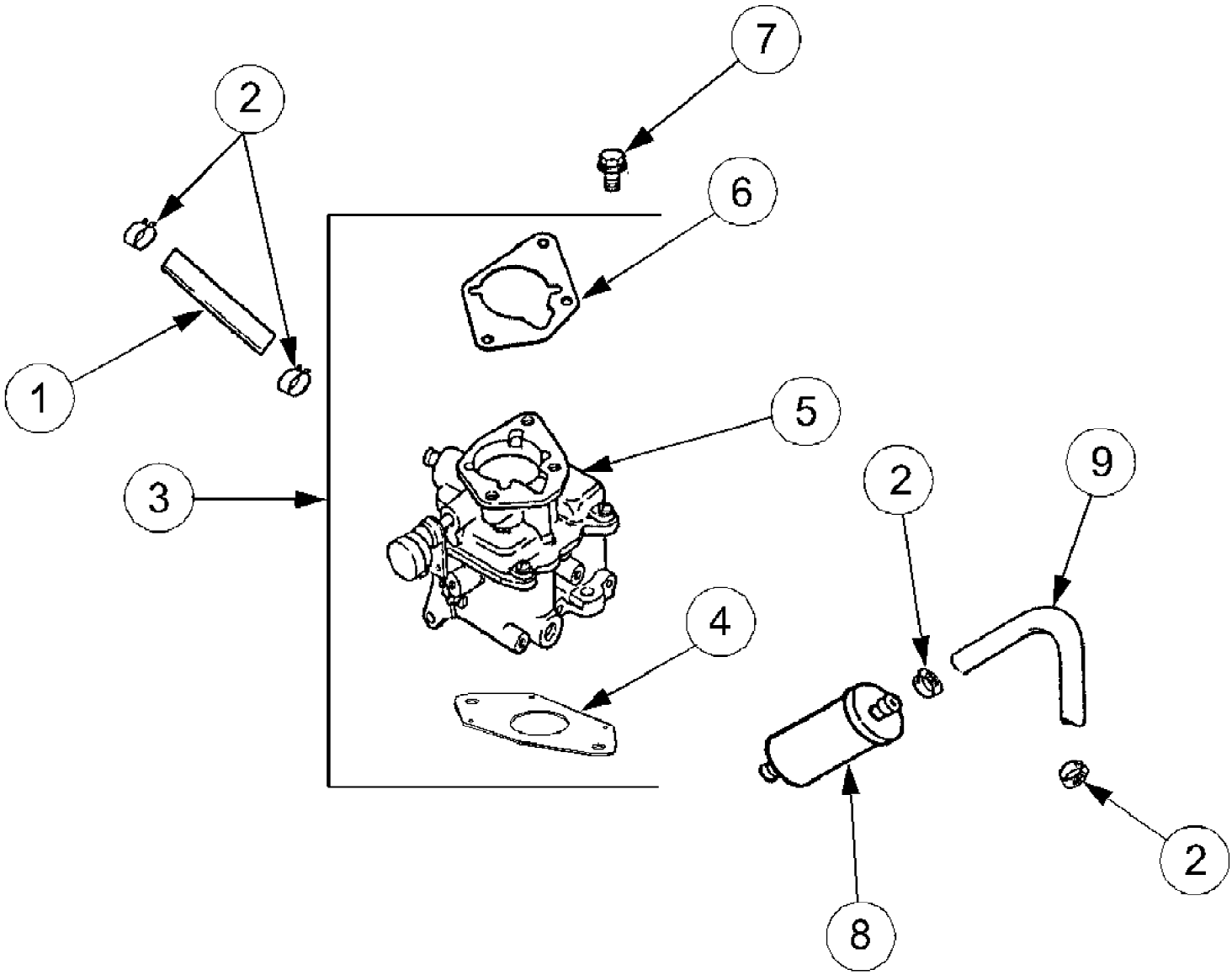

www.mymowerparts.com

For Discount Cub Cadet Parts Call 606-678-9623 or 606-561-4983

Ref #	Part Number	Qty	S/P/F	Description
1	KH-52-353-20	2	S	Line, Fuel 10"
2	KH-25-237-14-S	4	/P	Clamp, Hose
3	KH-24-853-35-S	1		Kit, Carburetor w/Gasket (Includes 4-6)
4	KH-24-041-53-S	1		Gasket, Carburetor
5		1		Carburetor Assembly Not available separately
6	KH-24-041-06	1	/P	Gasket, Air Cleaner Base
7	KH-M-651025-S	2		Screw, Hex Flange, M6 x 1.0 x 25
8	KH-24-050-02	1	S	Filter, Fuel
9	KH-24-353-12	1		Line, Fuel 11"
	723-3066-14	1	S	Insulator, Foam Fuel LIne Not Illustrated
	KH-24-518-24-S	1		Lead, Ground Not Illustrated
	KH-24-757-01	1	/P	Kit, Solenoid Not Illustrated; Includes Solenoid Screw [qty. 2], O-Ring, O-Ring, O-Ring, Solenoid Assembly & Solenoid Seat.
	KH-24-757-02	1	S	Kit, Float Repair Not Illustrated; Includes Carburetor Body Gasket, Float Screw, Float Assembly and Float Shaft.
	KH-24-757-03	1	S	Kit, Carburetor Repair Not Illustrated; Includes Carburetor Gasket; Carburetor Body Screw; Idle Needle Spring; U-Ring; Slow Jet O-Ring; Main Jet Screw O-Ring; Solenoid O-Rings; Inlet Needle Valve Clip; Idle Needle and Inlet Needle Valve.
	KH-24-757-07	1		Kit, Choke Repair Not Illustrated; Includes Choke Plate Screws; Choke Spring; Choke Lever; Choke Shaft; Choke Plate; Choke Bushings; and Choke Lever Cap.
	KH-24-755-125-S	1		Kit, High Altitude Not Illustrated

www.mymowerparts.com

For Discount Cub Cadet Parts Call 606-678-9623 or 606-561-4983

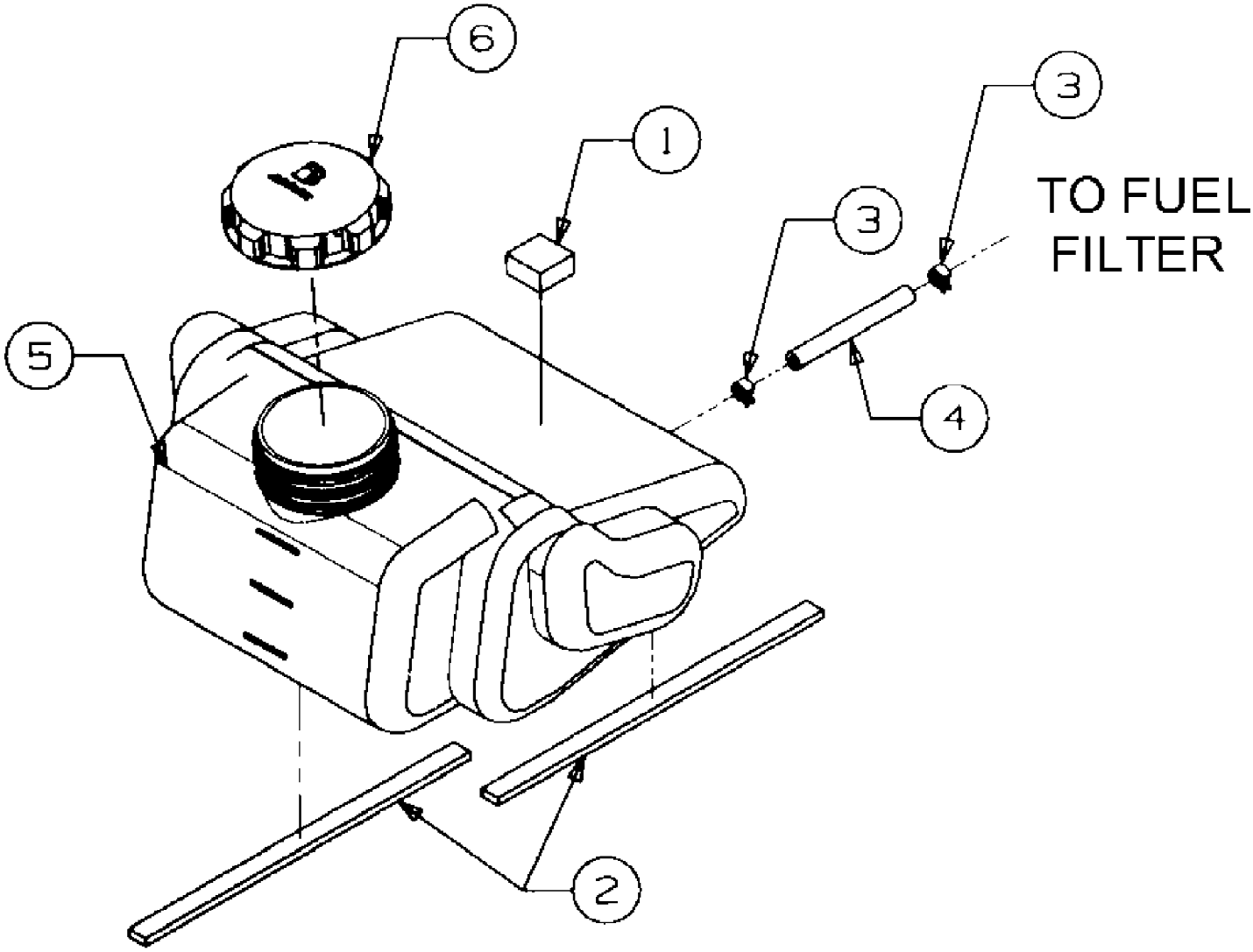

www.mymowerparts.com

For Discount Cub Cadet Parts Call 606-678-9623 or 606-561-4983

Ref #	Part Number	Qty	S/P/F	Description
1	722-3020	A/R		Foam, 1.25 Sq x .62 Thk
2	722-3022	A/R	S	Tape, Foam, .625 Wide x .25 Thk
3	726-0205	2	/P	Clamp, Hose
4	759-3330	1	/P	Line, Fuel, 72" (Shipped In 10ft Length)
5	751-3112B	1	/P	Tank, Fuel
6	751-3124B	1	S	Cap, Fuel
	723-3066-24	1	/P	Insulator, Foam Fuel LIne Not Shown

www.mymowerparts.com

For Discount Cub Cadet Parts Call 606-678-9623 or 606-561-4983

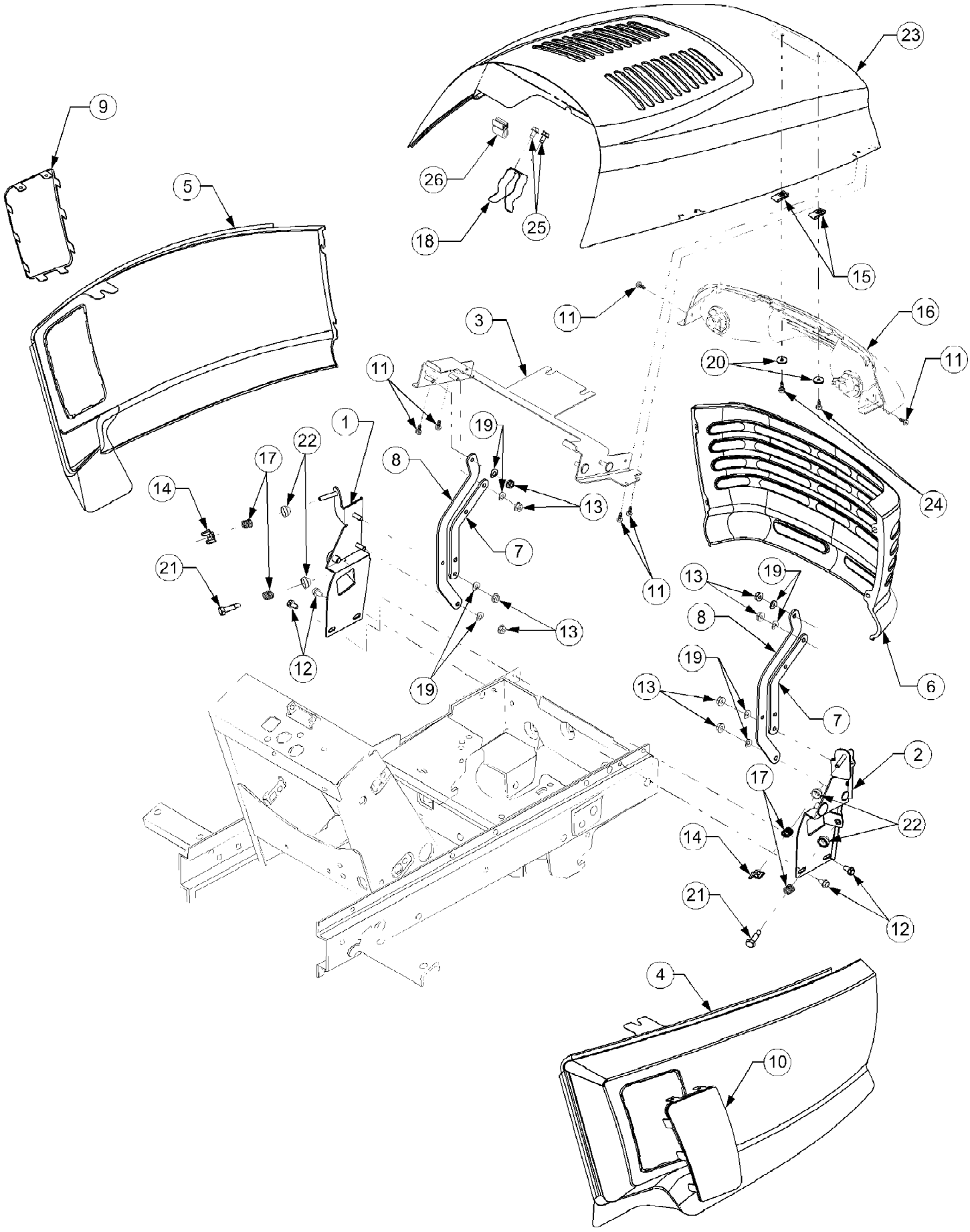

www.mymowerparts.com

For Discount Cub Cadet Parts Call 606-678-9623 or 606-561-4983

Ref #	Part Number	Qty	S/P/F	Description
1	603-0211	1		Bracket, Grille LH
2	603-0212	1	S	Bracket, Grille RH
3	603-04191	1	S	Bracket, Upper Hood
4	703-2396	1	S	Panel, RH Side
	777D07672	1		Graphic, GT 2186
	777X40079	1	/P	Strip, Protective
5	703-2397	1	S	Panel, LH Side
	777D07672	1		Graphic, GT 2186
	777X40079	1	/P	Strip, Protective
6	703-2398	1	S	Grille
	777I20314	1	/P	Graphic, Warning HOT
7	703-2465	2	/P	Link, Short Hood
8	703-2466A	2	S	Link, Long Hood
9	703-2495	1	S	Screen, LH Panel
10	703-2496	1	S	Screen, RH Panel
11	710-0351	6	/P	Screw, Truss Mach Tapp, #10 x .50
12	710-0599	4	/P	Screw, Hex Wash Hd Tapp, 1/4 x .50
13	712-3027	8	S	Nut, Hex Flange Lock, 1/4-20
14	712-0397	2	S	Nut, Wing, 1/4-20
15	726-0139	2	/P	Nut, U-Type Speed, #10
16	625-04001A	1	S	Headlight Assy (Includes Lamp and Socket)
	725-0963	2	S	Lamp, 12V
	725-1649	2	S	Socket, Lamp
	777X41348	1	S	Reflector, Headlight
17	732-0334	4	S	Spring, Compression, .50 OD x .50
18	732-1178	1		Spring, Hood Latch
19	736-0175	8	S	Washer, Spring, .265 x .562 x .025
20	736-0400	2	S	Washer, Flat, .218 x .62 x .063
21	738-3141	2	S	Bolt, Shoulder, .31 Dia x .75 Lg
22	748-3055	4	S	Bushing, Tapered
23	959-3747B	1		Hood, Series 2000
	777D07681	1		Graphic, Hood - RH
	777D07682	1		Graphic, Hood - LH
24	710-0436	2	S	Screw, Hex Tapp, 10-16 x .625
25	710-1005	2	S	Screw, Hex Wash Hd Tapp, 1/4-14 x .5
26	723-3061-19	19in	S	Seal, Heat Baffle

www.mymowerparts.com

For Discount Cub Cadet Parts Call 606-678-9623 or 606-561-4983

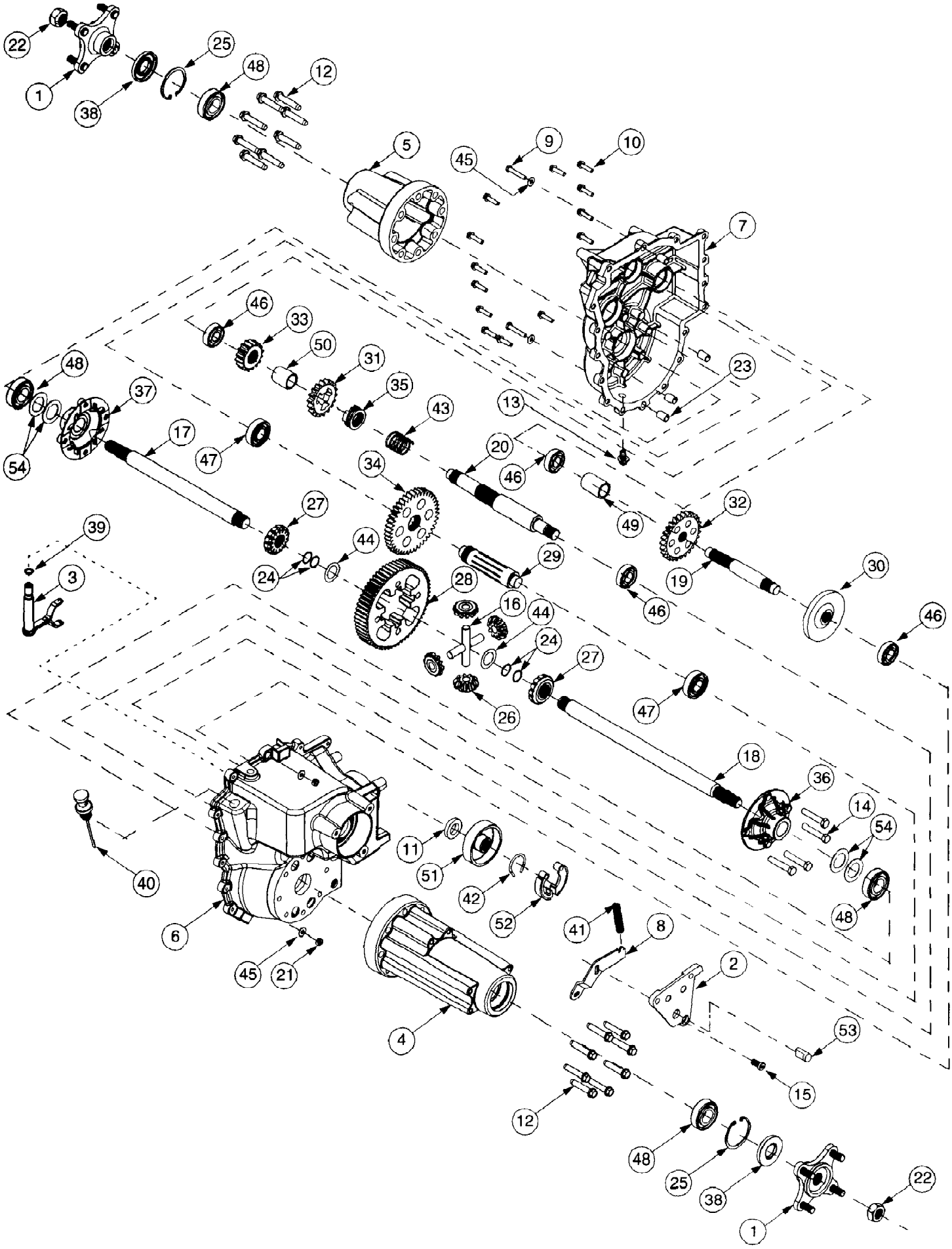

www.mymowerparts.com

For Discount Cub Cadet Parts Call 606-678-9623 or 606-561-4983

Ref #	Part Number	Qty	S/P/F	Description
1	618-0579A	2	/P	Hub Assembly, Wheel
2	618-3060	1	S	Plate Assembly, Brake
3	618-3084	1	S	Shift Yoke Assembly
4	619-0056	1		Axle Housing, RH
5	619-0057	1		Axle Housing, LH
6	719-3171	1		Transmission Housing, RH
	759-3746	A/R		Sealant, Ultra Grey
7	719-3170	1	/P	Transmission Housing, LH
8	703-2191	1		Brake Arm
9	710-0606	2	/P	Screw, Hex Cap, 1/4-20 x 1.5
10	710-0788	13	/P	Screw, Hex Wash Hd Tap, 1/4-20 x 1.0
11	721-3029	1	S	Seal, Shift Shaft
12	710-1008	16		Screw, TT, 3/8-16 x 1.875
13	710-1346	1	/P	Screw, Plug, M14 x 1.5 x .827
14	710-1670	4		Screw, Hex Hd Cap, 3/8-24 x 2.0 GR5
15	710-3262	1		Screw, Cap, 3/8-16 x .750
16	711-1052A	2		Shaft, Cross, .500 x 3.005
17	711-1320	1		Shaft, Axle, 1.00 x 12.90
18	711-1566	1		Shaft, Axle, 1.00 x 16.62
19	711-3374	1	S	Shaft, Drive
20	711-3379A	1		Shaft, Shifter
21	712-0291	2	S	Nut, Hex Center Lock, 1/4-20
22	712-1329	2	/P	Nut, Hex, 3/4-16
23	715-3045	6	S	Dowel Bushing
24	716-0172	4	S	Ring, Retaining, .750
25	716-0204	2		Ring, Retaining,
26	717-1446	4	S	Gear, Miter, 10T
27	717-1447	2		Gear, Miter, 14T
28	717-1568	1	S	Gear, Differential Spur, 60T
29	717-3346	1		Shaft Output, 9T
30	717-3347	1		Gear, Bevel, 36T
31	717-3387	1		Gear, Spur, 18T
32	717-3388	1		Gear, Spur, 27T
33	717-3391	1		Gear, Spur, 16T
34	717-3392	1		Gear, Spur, 42T
35	718-3039	1		Collar, Drive
36	719-0375	1		Housing, Differential, RH
37	719-0378	1		Housing, Differential, LH
38	721-0520	2		Seal, Oil, 25.4mm x 54mm x 7mm
39	721-3008	1	/P	O-Ring, 3/8 1 D x 1/2 OD x 1/16 Thk
40	727-3085	1	S	Dipsick, Oil
41	732-0152	1		Spring, Compression
42	732-3077	1		Spring, Brake Shoe
43	732-3113	1		Spring, Compression, 1.015 ID x 1.6
44	736-0423	A/R		Washer, Flat, 1.0 x 1.56 x .010 Thk
	736-0431	A/R	S	Washer, Flat, 1.0 x 1.56 x .015 Thk
	736-0424	A/R	S	Washer, Flat, 1.0 x 1.56 x .020 Thk
	736-0420	A/R	S	Washer, Flat, 1.0 x 1.56 x .040 Thk
	736-0600	1		Washer, Flat, .558 x .866 x .078 Thk
45	736-0463	4	S	Washer, Flat, .25 x .630 x .0515
46	741-0361	4	S	Bearing, Ball, 17 ID x 40 OD x 12
47	741-3057	2	S	Bearing, Ball, 6204
48	741-3114	4		Bearing, Ball, 6205-1

www.mymowerparts.com

For Discount Cub Cadet Parts Call 606-678-9623 or 606-561-4983

Ref #	Part Number	Qty	S/P/F	Description
49	750-3133	1		Spacer, .757 x 1.0 x 1.460
50	750-3134	1		Spacer, .885 x 1.125 x 1.40
51	761-3019	1		Drum, Brake
52	761-3020	2	S	Brake, Shoe
53	761-3028	1		Brake, Actuator
54	736-0745	4	/P/F	Washer, Flat, 1.010 x .56 x .060
	618-3231	1	S	Hydro Transmission (Transmission Serial Number Begins with the Number 2, 3, or 4)

www.mymowerparts.com

For Discount Cub Cadet Parts Call 606-678-9623 or 606-561-4983

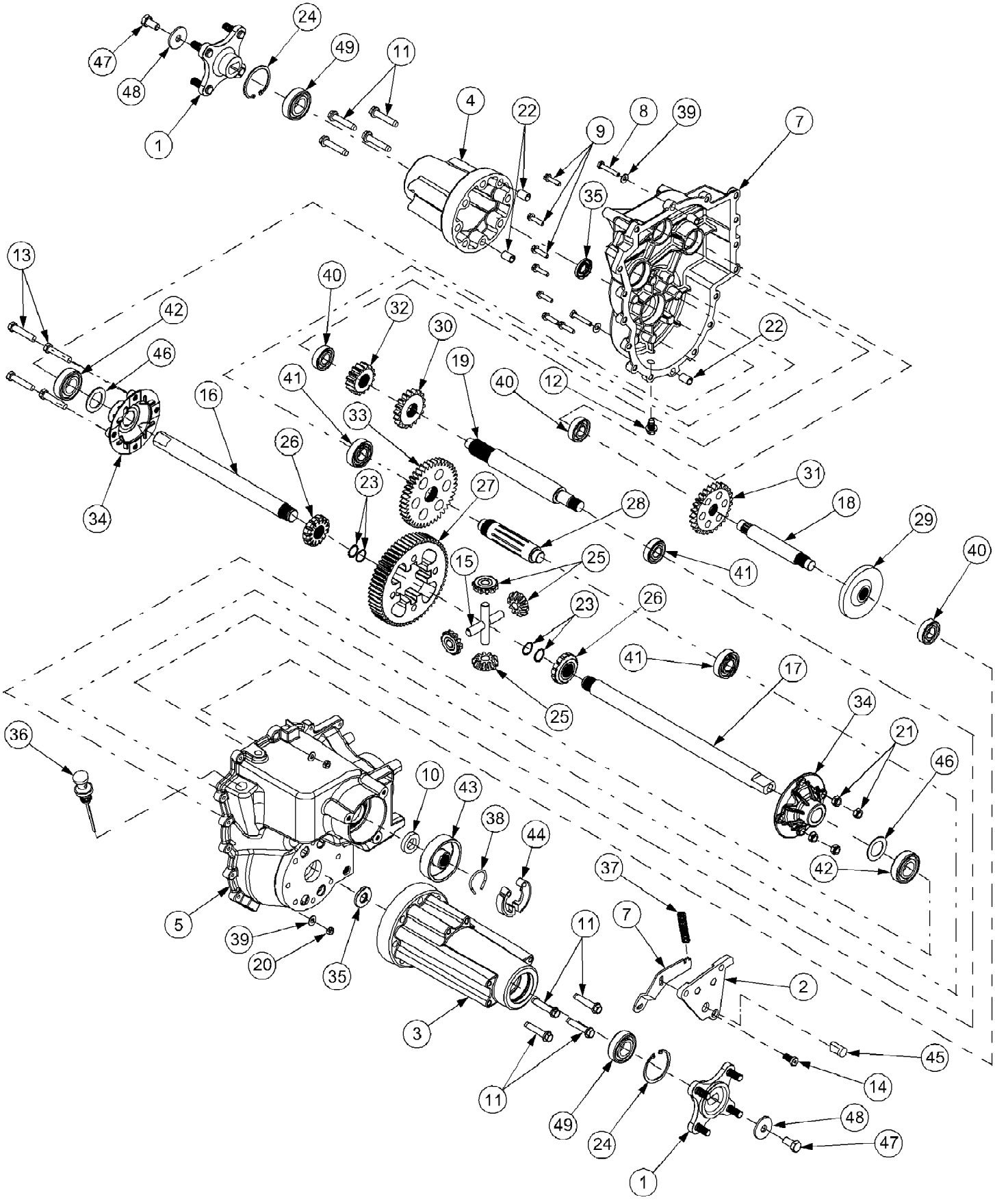

www.mymowerparts.com

For Discount Cub Cadet Parts Call 606-678-9623 or 606-561-4983

Ref #	Part Number	Qty	S/P/F	Description
1	618-04115	2	S	Hub Assembly, Wheel
2	618-3060	1	S	Plate Assembly, Brake
3	619-0056	1		Axle Housing, RH
4	619-0057	1		Axle Housing, LH
5	719-04078	1	S	Transmission Housing, RH
	759-3746	1		Sealant, Ultra Grey
6	719-04077	1	S	Transmission Housing, LH
7	703-2191	1		Brake Arm
8	710-0606	2	/P	Screw, Hex Cap, 1/4-20 x 1.5
9	710-0788	13	/P	Screw, Hex Wash Hd Tap, 1/4-20 x 1.0
10	721-3029	1	S	Seal, Shift Shaft
11	710-1008	8		Screw, TT, 3/8-16 x 1.875
12	710-1633	1		Screw, Plug, M14 x 1.5 x .827
13	710-3144	4	/P	Screw, Hex Cap, 3/8-16 x 2.0 GR5
14	710-3262	1		Screw, Cap, 3/8-16 x .750
15	711-1052A	2		Shaft, Cross, .500 x 3.005
16	711-04164	1	S	Shaft, Axle, 1.00 x 12.07
17	711-04211	1	S	Shaft, Axle, 1.00 x 15.73
18	711-04210	1	S	Shaft, Drive
19	711-04209	1	S	Shaft, Intermediate
20	712-0291	2	S	Nut, Hex Center Lock, 1/4-20
21	712-3020	4	S	Nut, Hex Insert Lock, 3/8-16 GR5
22	715-3045	6	S	Dowel Bushing
23	716-04032	4		Ring, Retaining, .938
24	716-0204	2		Ring, Retaining,
25	717-1446	4	S	Gear, Miter, 10T
26	717-04102	2	S	Gear, Miter, 14T
27	717-1568	1	S	Gear, Differential Spur, 60T
28	717-3346	1		Shaft, Output, 9T
29	717-3347	1		Gear, Bevel, 36T
30	717-04111	1	S	Gear, Spur, 18T
31	717-3388	1		Gear, Spur, 27T
32	717-3391	1		Gear, Spur, 16T
33	717-3392	1		Gear, Spur, 42T
34	719-0375A	2	S	Housing, Differential, RH
35	721-04031	2	S	Seal, Oil, 1.0 x 1.499
36	727-3085	1	S	Dipsick, Oil
37	732-0152	1		Spring, Compression
38	732-3077	1		Spring, Brake Shoe
39	736-0463	4	S	Washer, Flat, .25 x .630 x .0515
40	741-0361	3	S	Bearing, Ball, 17 ID x 40 OD x 12
41	741-3057	3	S	Bearing, Ball, 6204
42	741-3114	2		Bearing, Ball, 6205-1
43	761-3019	1		Drum, Brake
44	761-3020	2	S	Brake, Shoe
45	761-3028	1		Brake, Actuator
46	736-0745	2	/P	Washer, Flat, 1.010 x .56 x .060
47	710-3119	2	/P	Screw, Hex Lock, 3/8-16 x .75 GR5
48	736-0227	2	S	Washer, Flat, .39 x 1.5 x 1.34
49	741-0681	2		Bearing, Ball
	737-3120	1	/P	Drive System Fluid Plus - Quart

www.mymowerparts.com

For Discount Cub Cadet Parts Call 606-678-9623 or 606-561-4983

Ref #	Part Number	Qty	S/P/F	Description
	618-04110	1	S	Hydro Transmission Oil Capacity approximately 4 quarts for 618-04110 transmission

www.mymowerparts.com

For Discount Cub Cadet Parts Call 606-678-9623 or 606-561-4983

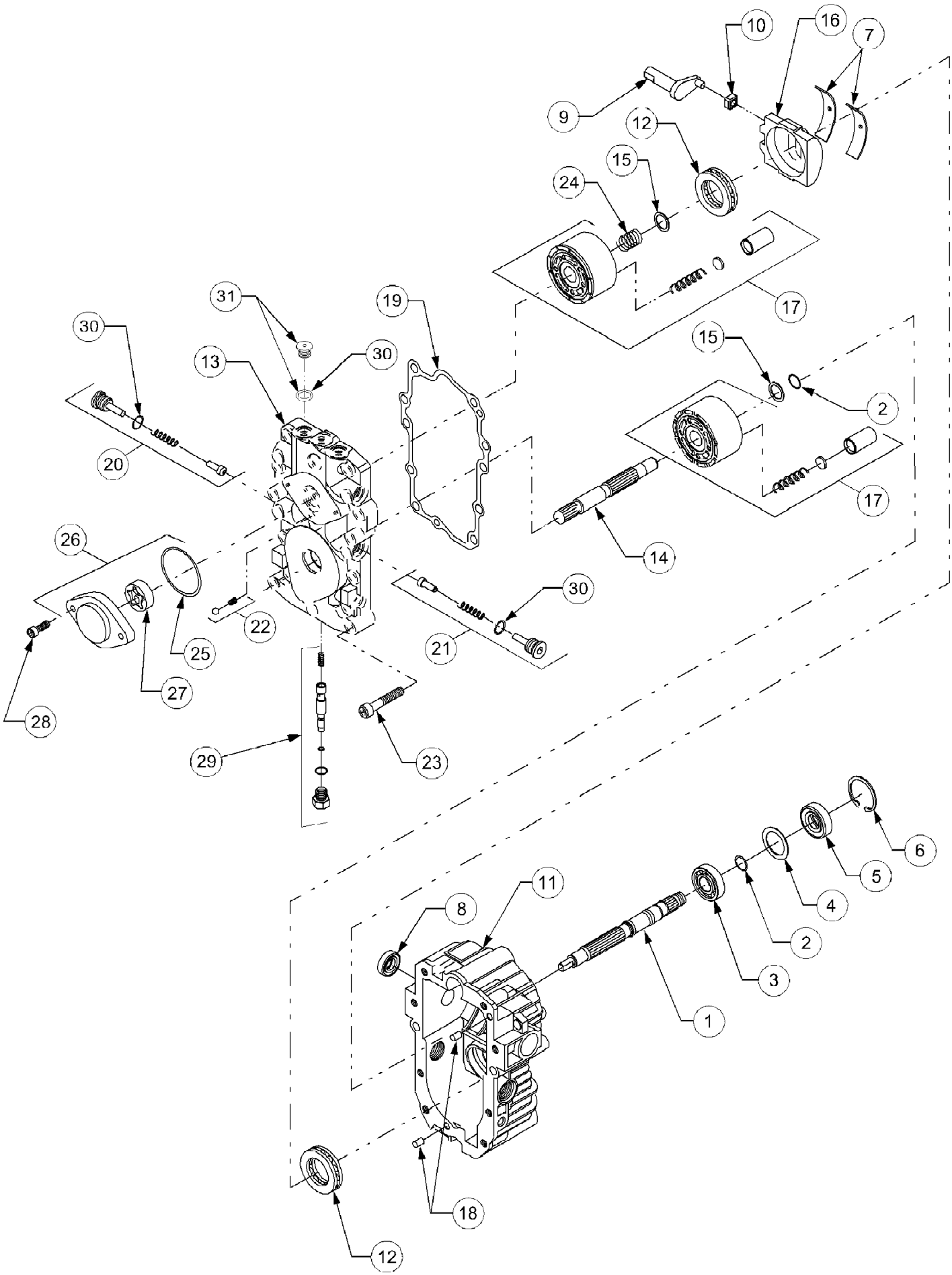

www.mymowerparts.com

For Discount Cub Cadet Parts Call 606-678-9623 or 606-561-4983

Ref #	Part Number	Qty	S/P/F	Description
1	HG-50158	1		Shaft, Pump (Splined)
2	HG-2003016	2	/P	Ring, Retaining
3	HG-2003043	1	S	Bearing, Ball
4	HG-2003018	1	/P	Spacer
5	HG-9008000-0128	1	/P	Seal, Lip
6	HG-2003052	1	/P	Ring, Retaining
7	HG-2003023	2	S	Bearing, Cradle
8	HG-9008000-0126	1	/P	Seal, Lip
9	HG-2003005	1	/P	Arm, Trunnion
10	HG-2000015	1	/P	Guide, Slot
11	HG-2513036	1	/P	Housing Kit
12	HG-2003044	2	S	Bearing Assembly, Thrust Ball
13	HG-51077	1		Center Section Kit
14	HG-2003034	1		Shaft, Motor
15	HG-2003017	2	/P	Washer, Block Thrust
16	HG-2003087	1	/P	Swash Plate
17	HG-70079	2	S	Block Assembly
18	HG-9004800-2506	2	/P	Pin
19	HG-2003060	1	/P	Gasket, Center Section
20	HG-2510027	1		Kit, Check Valve
21	HG-2510034	1	/P	Kit, Orificed Check Valve
22	HG-2510011	1	/P	Kit, Charge Relief Valve
23	HG-9007314-0808	8	/P	Screw, Socket Hd
24	HG-2003014	1	/P	Spring, Block
25	HG-9004101-1340	1	/P	O-Ring
26	HG-2513027	1	/P	Kit, Charge Pump
27	HG-J1041008	1	S	Gerotor Assy
28	HG-50095	2		Screw, Socket Hd
29	HG-2153011	1		Bypass Valve Kit
30	HG-9004201-3700	3	/P	O-Ring
31	HG-9005110-5600	2	/P	Plug w/O-Ring

www.mymowerparts.com

For Discount Cub Cadet Parts Call 606-678-9623 or 606-561-4983

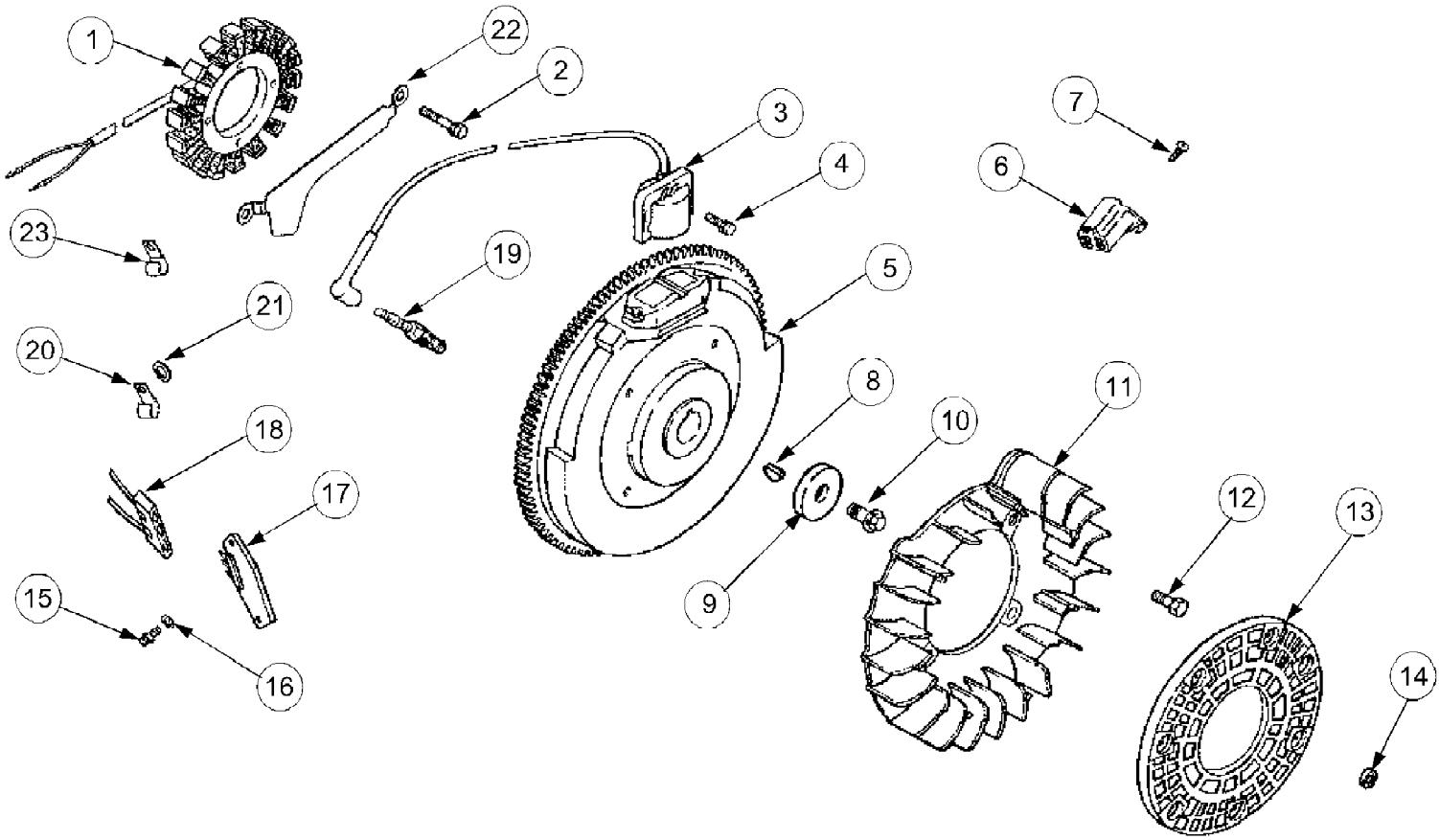

www.mymowerparts.com

For Discount Cub Cadet Parts Call 606-678-9623 or 606-561-4983

Ref #	Part Number	Qty	S/P/F	Description
1	KH-54-755-09	1	S	Stator Kit, 15 Amp (Incl. Ref #22)
2	KH-M-0548025	2		Screw, Stator Mtg. M5 x .8 x 25
3	KH-24-584-01	2	S	Module, Ignition
4	KH-M-545020-S	4		Screw, Module M5 x .8 x 20
5	KH-24-025-01	1	S	Flywheel Assembly
6	KH-25-155-06	1		Connector
7	KH-25-086-91-S	2	/P	Screw
8	KH-X-42-15	1	/P	Key
9	KH-12-468-03	1	/P	Washer, Flywheel Mtg. Screw
10	KH-12-086-14	1		Screw, Flywheel Mtg, M10x1.5 x 46
11	KH-24-157-01	1	S	Fan
12	KH-25-086-47	4	/P	Bolt, Shoulder
13	KH-24-162-02	1		Screen, Grass
14	KH-24-018-03	3	S	Retainer
15	KH-24-086-18	2		Screw Phillips Hd., #11-16 x .875
16	KH-X-25-92	3		Washer, Plain
17	KH-41-403-09	1	S	Regulator - Rectifier
18	KH-236602	1	S	Connector, Regulator-Rectifier
19	759-3336	2	/P	Spark Plug
20	KH-235173	1		Clip, Cable
21	KH-X-25-63	1	/P	Washer, Plain 1/4"
22	KH-24-126-71	1		Bracket, Stator Wire
23	KH-48-154-02	1		Clip, Cable
	KH-24-176-08	1	S	Harness, Wire
	KH-25-454-03-S	2		Tir, Wire
	KH-24-126-137-S	1		Bracket, Ground Strap

www.mymowerparts.com

For Discount Cub Cadet Parts Call 606-678-9623 or 606-561-4983

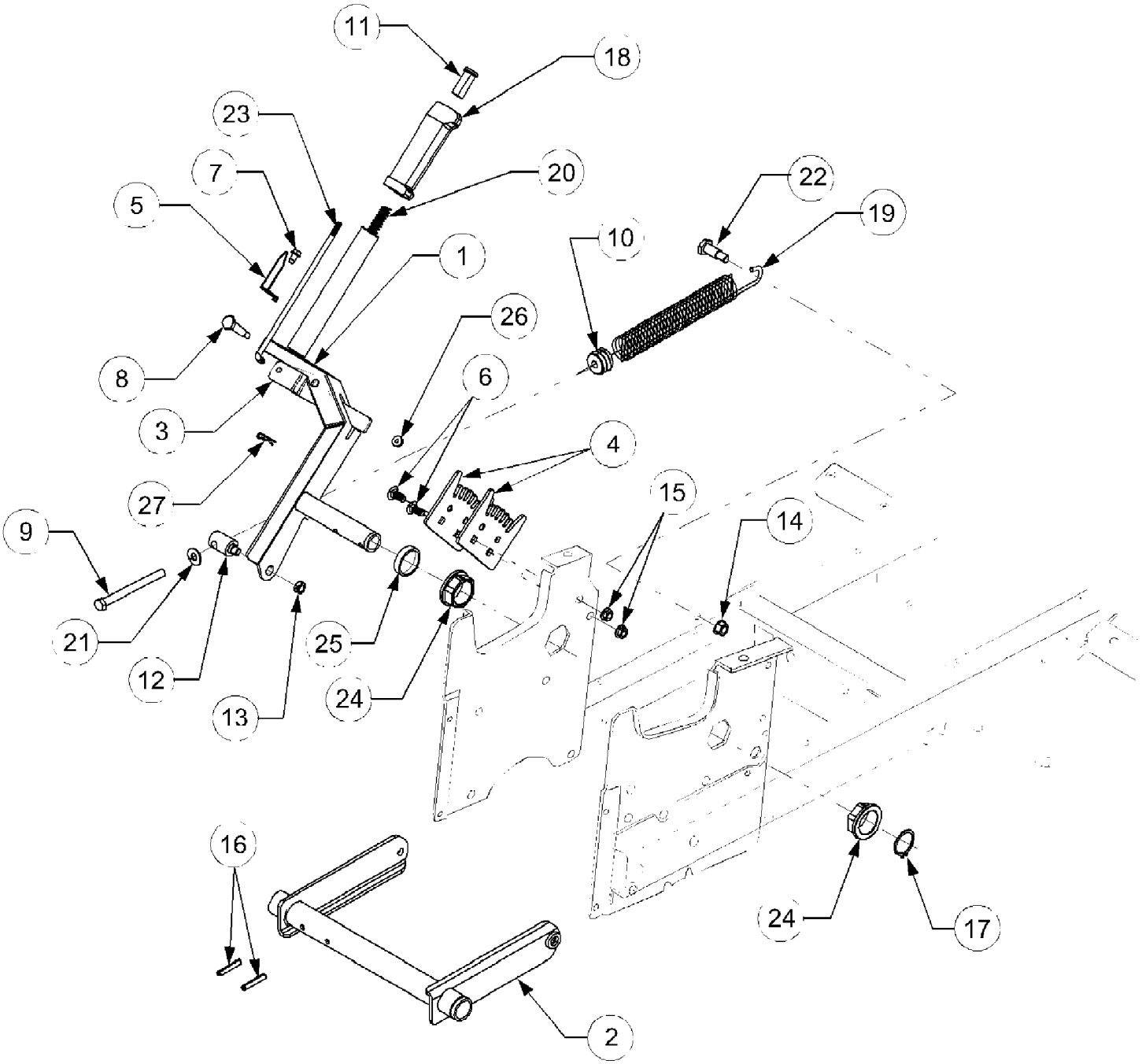

www.mymowerparts.com

For Discount Cub Cadet Parts Call 606-678-9623 or 606-561-4983

Ref #	Part Number	Qty	S/P/F	Description
1	603-04141	1		Handle Assembly, Lift
2	603-0059A	1	S	Shaft Assembly, Lift
3	603-05247	1		Fork, Lift
4	703-2239A	2	S	Bracket, Lift Index
5	703-2558	1		Indicator, Lift Height
6	710-0451	2	/P	Bolt, Carriage, 5/16-18 x .75
7	710-0599	1	/P	Screw, Hex Wash Tapp, 1/4 x .5
8	738-0560	1	S	Screw, Shoulder, .374 x 1.375
9	710-3279	1	/P	Screw, Hex Cap, 3/8-16 x 4.25 GR5
10	711-0635	1	/P	Insert, Spring
11	711-0642A	1	/P	Button, Handle
12	711-3350	1		Ferrule, Adjustment
13	712-0262	1	/P	Nut, Hex Center Lock, Jam, 3/8-24
14	712-0431	1	S	Nut, Hex Flanged Lock, 3/8-16
15	712-3004A	2	/P	Nut, Hex Flanged Top Lock, 5/16-18
16	715-0114	2	S	Pin, Spiral Spring, 1/4 Dia x 1.5
17	716-0116	1	/P	Ring, Snap, 1.25 Dia Shaft
18	731-3158	1	/P	Grip, Lift Handle
19	732-3093	1		Spring, Extension
20	732-3097	1		Spring, Compression
21	736-0267	1	S	Washer, Flat, .385 x .87 x .06
22	738-0145	1	S	Bolt, Shoulder
23	747-3175A	1	/P	Rod, Index
24	748-3051	2	S	Bearing, Hex Flange, 1.25 ID
25	750-3131	1		Spacer, 1.28 ID x 1.5 OD x .335 Lg
26	712-3027	1	S	Nut, Hex Flange Lock, 1/4-20
27	714-0104	1	S	Pin, Internal Cotter

www.mymowerparts.com

For Discount Cub Cadet Parts Call 606-678-9623 or 606-561-4983

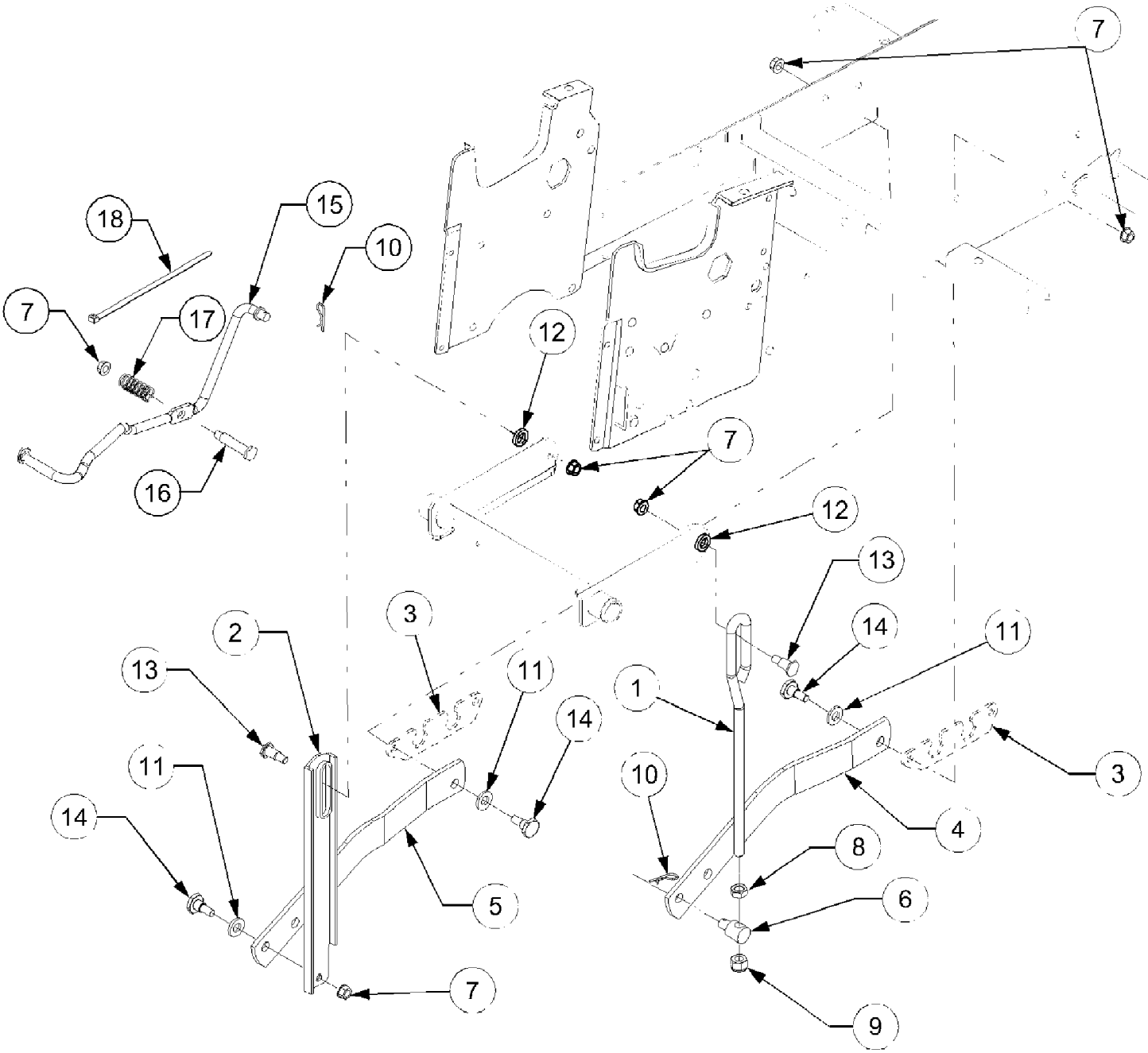

www.mymowerparts.com

For Discount Cub Cadet Parts Call 606-678-9623 or 606-561-4983

Ref #	Part Number	Qty	S/P/F	Description
1	747-04196	1		Rod, Lift Link
2	703-2234	1		Bracket, LH Hanger
3	703-2804	2		Plate, Bearing Mounting
4	703-2832	1		Link, RH Lift
5	703-2833	1		Link, LH Lift
6	711-3319	1	S	Ferrule, Adjustment
7	712-0431	6	S	Nut, Hex Flange Lock, 3/8-16
8	712-3048	1	S	Nut, Hex Jam, 1/2-13 GR5
9	712-3083	1	/P	Nut, Hex Insert Lock, 1/2-13
10	714-0145	2	S	Pin, Internal Cotter
11	736-0326	3	S	Washer, Flat, .5 x 1.5 x .15
12	736-3069	2		Washer, Flat, .531 x .875 x .15
13	738-0430	2		Bolt, Shoulder
14	738-0507B	3	S	Bolt, Shoulder
15	747-3236A	1	/P	Rod, Lift Assist
16	738-0129	1	/P	Bolt, Shoulder, 3/8-16: .5 x 2.0
17	732-3094	1	S	Spring, Compression, .63 ID x 2.0
18	726-0209	1	/P	Tie, Cable

www.mymowerparts.com

For Discount Cub Cadet Parts Call 606-678-9623 or 606-561-4983

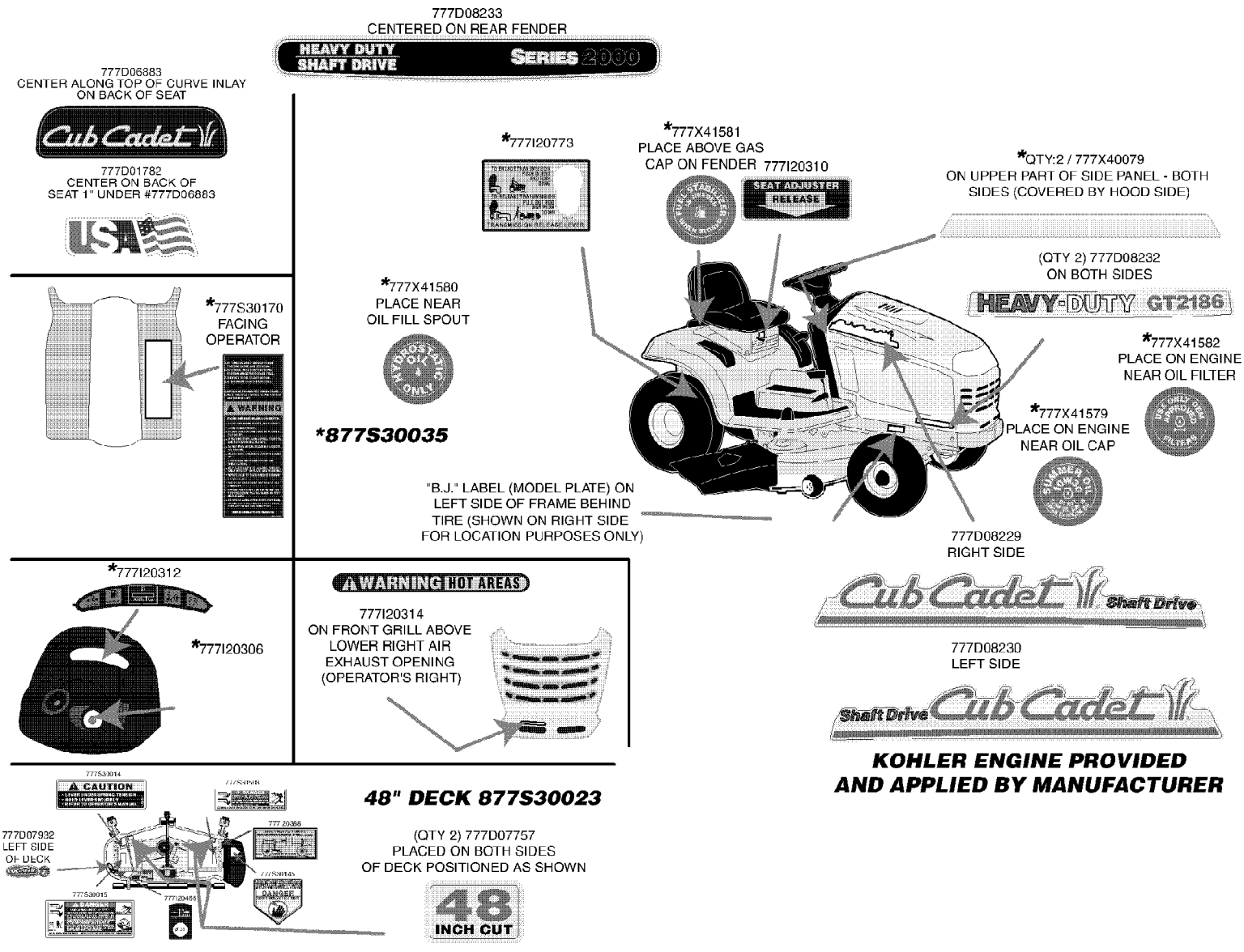

www.mymowerparts.com

For Discount Cub Cadet Parts Call 606-678-9623 or 606-561-4983

Ref #	Part Number	Qty	S/P/F	Description
777D06883	777D06883	1	/P	LABEL-SEAT BACK
777D01782	777D01782	1	/P	LABEL-MADE IN USA
777S30170	777S30170	1	/P	LABEL-FRAME COVER
777I20312	777I20312	1	/P	LABEL-DASH
777I20306	777I20306	1	/P	LABEL-IGNITION SWITCH
777I20466	777I20466	1		LABEL-HEIGHT ADJUST KNOB 3000 DECK
777S30015	777S30015	1		LBL.RIDER DNGR.STRAIGT
777D07932	777D07932	1		LABEL-CYCLO CUT
777S30014	777S30014	1	/P	LBL.CAUTION SPRING TENSN
777S30503	777S30503	1	/P	LABEL-DANGER CHUTE
777I20388	777I20388	1		LABEL-DECK HEIGHT
777S30145	977S30145	1	/P	LABEL
777D07757	777D07757	1		LABEL-48" CUT
777I20314	777I20314	1	/P	LBL.WARNING/HOT AREA
777X41580	777X41580	1		LABLE-HYDRO OIL
777D08230	777D08230	1		LABEL-LH HOOD SHFT DRV
777D08229	777D08229	1		LABEL-RH HOOD SHFT DRV
777X41579	777X41579	1		LABEL-10W30 OIL
777X41582	777X41582	1		LABLE-OEM FILTERS
777D08232	777D08232	1		LABEL-MODEL GT2186
777X40079	777X40079	1	/P	STRIP-PROTECTIVE
777I20310	777I20310	1		LABEL-SEAT ADJUSTER
777X41581	777X41581	1		LABLE-FUEL STABIL
777I20773	777I20773	1		LABEL-HITCH PLATE
777D08233	777D08233	1		LABEL-2000 FENDER

www.mymowerparts.com

For Discount Cub Cadet Parts Call 606-678-9623 or 606-561-4983

Neutral Linkage, Hydraulic Pickup And Return Tubes

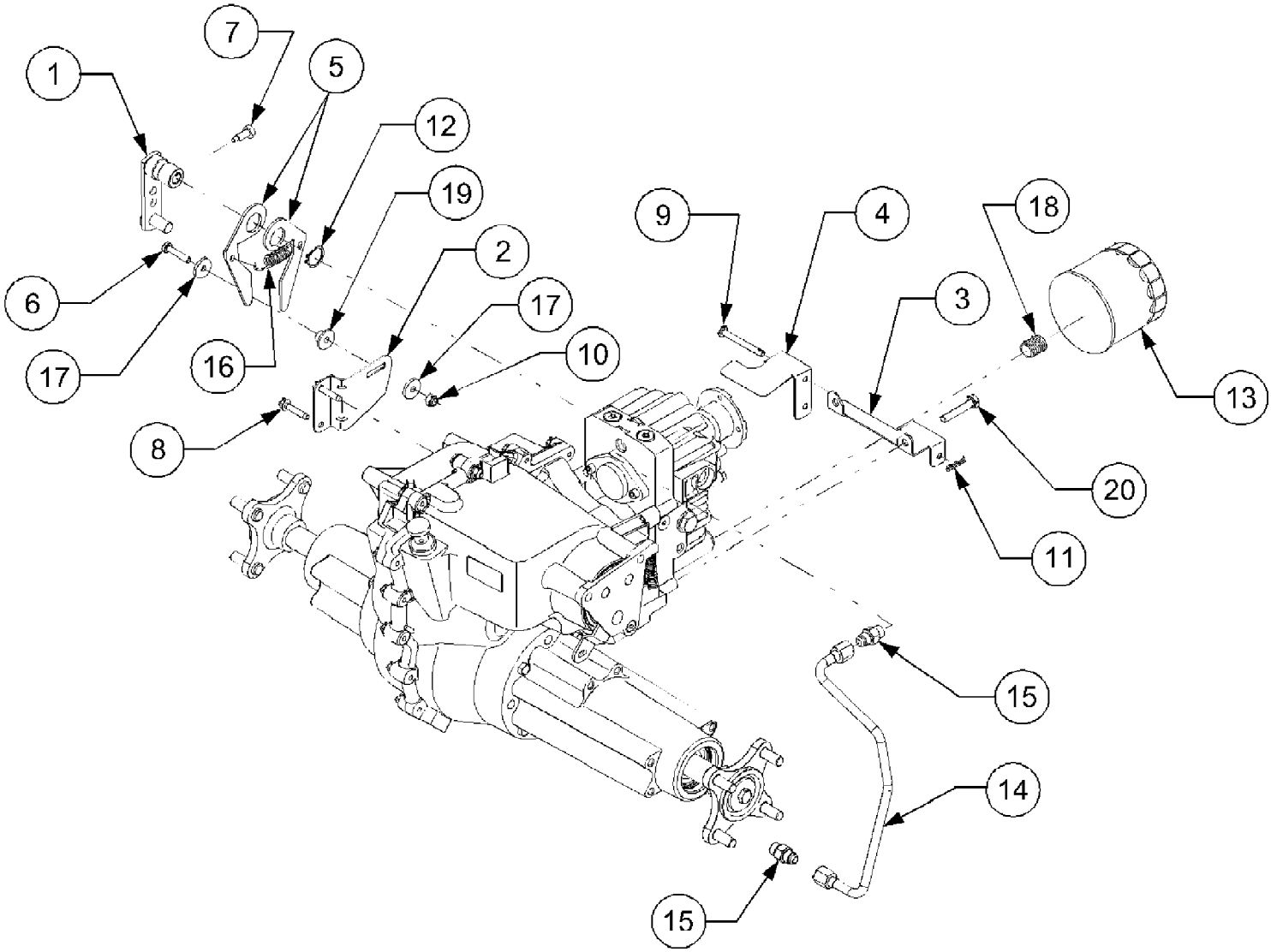

www.mymowerparts.com

For Discount Cub Cadet Parts Call 606-678-9623 or 606-561-4983

Ref #	Part Number	Qty	S/P/F	Description
1	603-0160	1		Arm Assembly, Control
2	603-04184	1		Bracket, Hydro Neutral
3	703-05315	1		Bracket, Hydro Dump Mtg,
4	703-05316	1		Bracket, Hydro Dump Actuator
	747-04230	1		Dump Valve Release Rad
5	703-2441	2		Arm, Neutral
6	710-0106	1	/P	Screw, Hex Cap, 1/4-20 x 1.25
7	710-04171	1		Screw, Special Hex Cap, 5/16-24 x .625
8	710-0809	2		Screw, Hex Wash TT-Tap, 1/4-20 x 1.25
9	711-04220	1		Pin, Clevis, .25 x 2.38
10	712-0324	1	/P	Nut, Hex Top Lock, 1/4-20
11	714-0104	1	S	Pin, Internal Cotter
12	716-0111	1	/P	Ring, Snap, .875 Shaft
13	723-3014	1	S	Filter, Oil
14	727-04064	1	S	Tube, Hydro Inlet
15	727-3002	2	S	Connector, w/O-Ring
	721-3001	2	/P	O-Ring, 3/8 OD Tube
16	732-3119	1	S	Spring, Extension, .5 OD x 1.97
17	736-0176	2	S	Washer, Flat, .25 x .93 x .120 Thk
18	737-3022	1	S	Nipple, Oil Filter
19	750-0918	1		Spacer, Centering
20	710-3180	2	/P	Screw, Hex Cap, 5/16-18 x 1.75 GR5

www.mymowerparts.com

For Discount Cub Cadet Parts Call 606-678-9623 or 606-561-4983

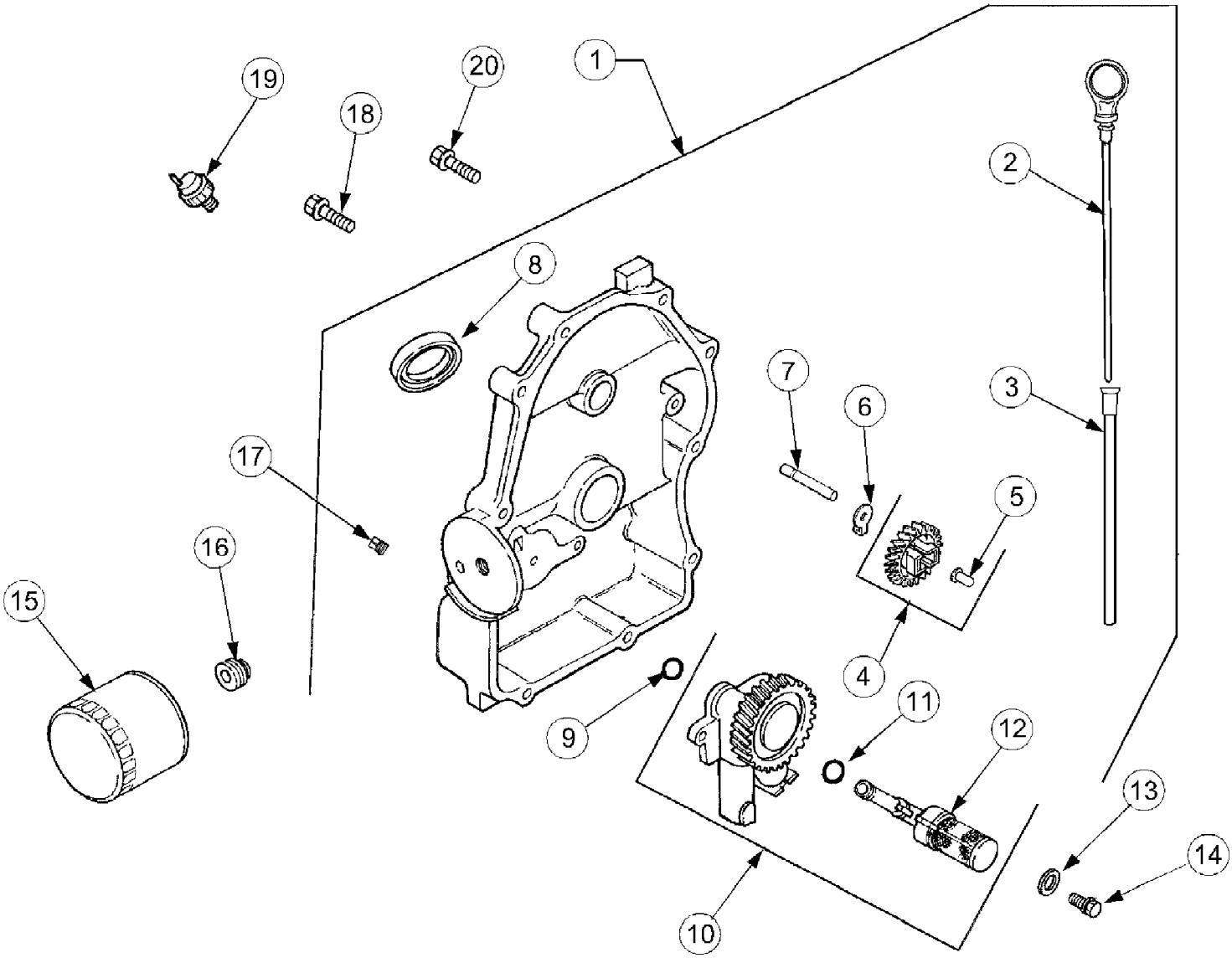

www.mymowerparts.com

For Discount Cub Cadet Parts Call 606-678-9623 or 606-561-4983

Ref #	Part Number	Qty	S/P/F	Description
1	KH-24-009-83-S	1	S	Plate Assy, Closure (Incl. Ref #2-12, 17)
2	KH-24-038-10-S	1	/P	Dipstick
3	KH-24-755-121-S	1	/P	Tube, Dipstick (Includes 2)
4	KH-24-043-12	1	/P	Kit, Governor Gear (Incl. Ref #5)
5	KH-12-380-01	1	/P	Pin, Governor Regulating
6	KH-24-448-01-S	1	/P	Tab, Locking
7	KH-12-144-02	1		Shaft, Governor Gear
8	KH-52-032-08	1	S	Seal, Oil (PTO end)
9	KH-24-153-08	1		O-Ring
10	KH-24-393-37-S	1	S	Oil Pump Assy (Incl. Ref #11-12)
11	KH-24-153-01	1	/P	O-Ring, Oil Pick-up
12	KH-24-381-04	1		Pick-up, Oil
13	KH-M-0631005	2	S	Washer, Plain
14	KH-M-0645025	2	S	Screw, Hex Flange, M6 x 1.0 x 25
15	KH-12-050-08	1	S	Filter, Oil
16	KH-24-136-01	1		Nipple, Oil Filter
17	KH-25-139-60-S	2	/P	Plug, Pipe 1/8
18	KH-24-086-16	9	S	Screw, Hex Flange, M8 x 1.25 x 45
19	KH-25-099-24	1	S	Switch, Pressure
20	KH-24-086-17	1	S	Screw, Hex Flange, M8 x 1.25 x 45

www.mymowerparts.com

For Discount Cub Cadet Parts Call 606-678-9623 or 606-561-4983

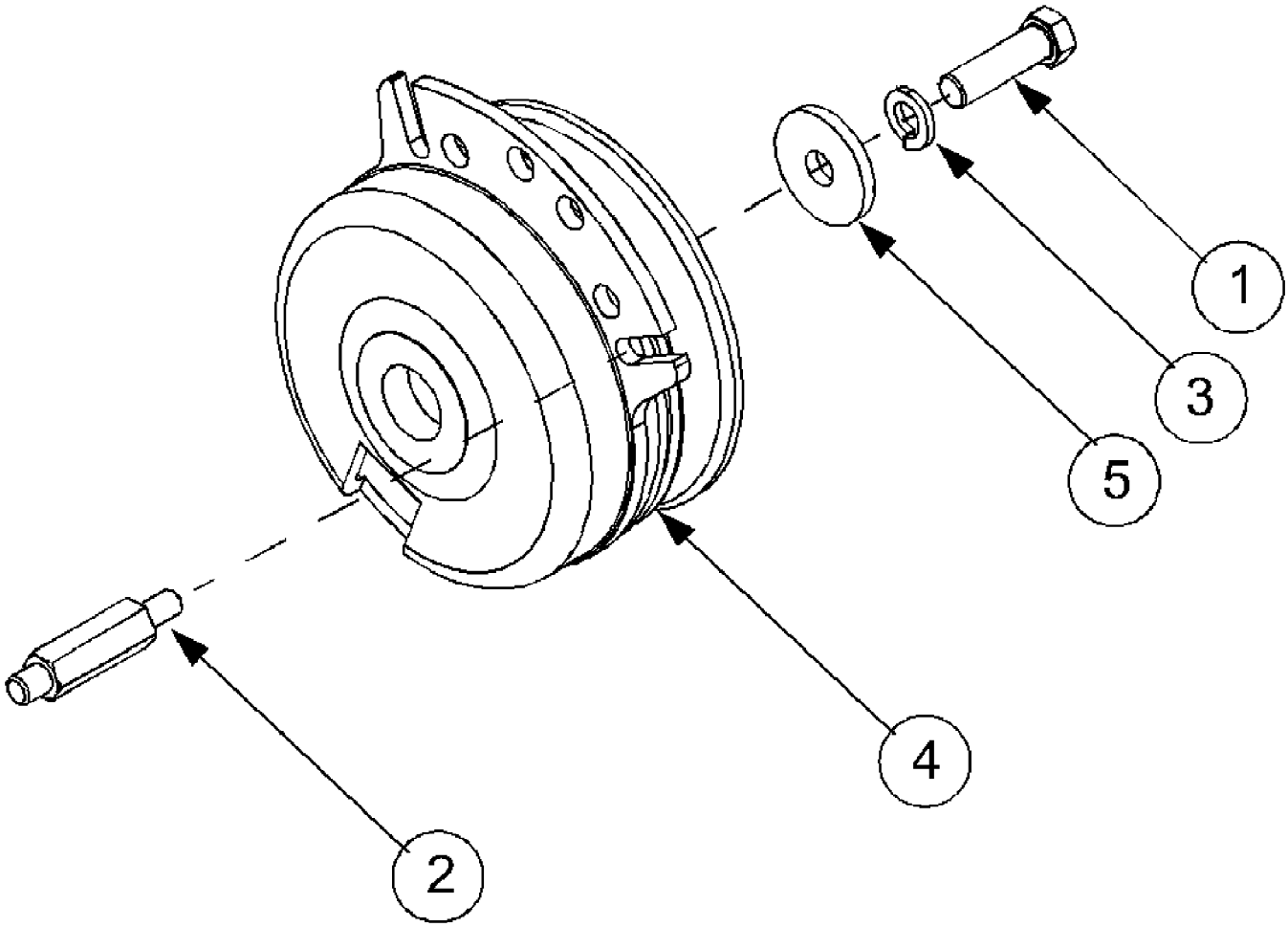

www.mymowerparts.com

For Discount Cub Cadet Parts Call 606-678-9623 or 606-561-4983

Ref #	Part Number	Qty	S/P/F	Description
1	710-0757	1	/P	Screw, Hex Cap, 7/16-20 x 1.5 GR5
2	711-1083	1	S	Stud, Clutch Stop
3	736-0171	1	S	Washer, Lock, 3/8
4	717-3403	1	S	Clutch Assy, PTO
	750-3356	1		Spacer (Not Shown)
5	736-3082A	1	/P	Washer, Flat, .445 x 1.5 x 1.72 Hdn

www.mymowerparts.com

For Discount Cub Cadet Parts Call 606-678-9623 or 606-561-4983

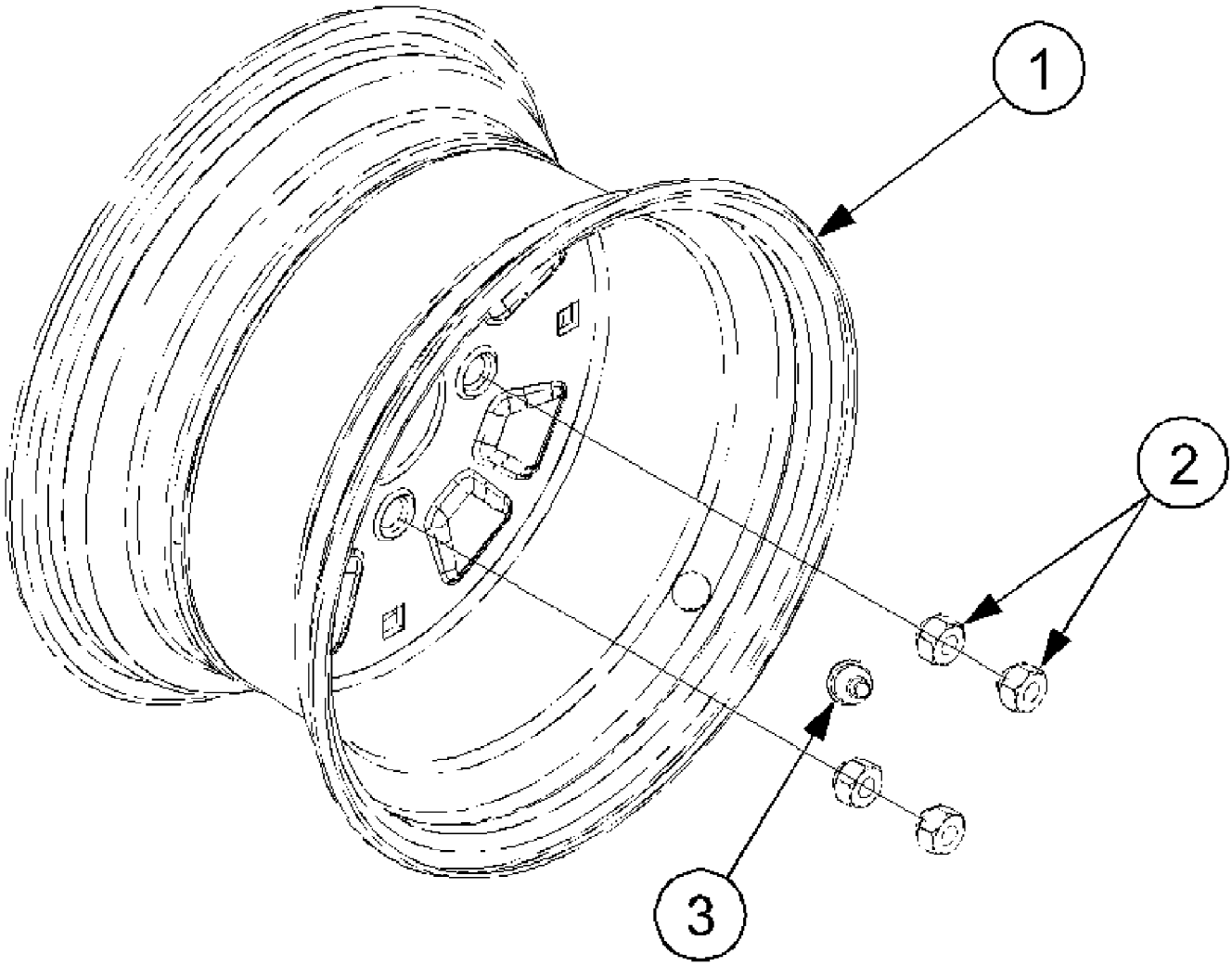

www.mymowerparts.com

For Discount Cub Cadet Parts Call 606-678-9623 or 606-561-4983

Ref #	Part Number	Qty	S/P/F	Description
	734-3190	2	S	Tire, Cub Tread, 23 x 9.5 x 12
1	634-3189	2		Rim Assy, Rear
2	712-3050	8	/P	Nut, Lug, 7/16-14
3	734-0255	2	S	Valve, Tubeless Air

www.mymowerparts.com

For Discount Cub Cadet Parts Call 606-678-9623 or 606-561-4983

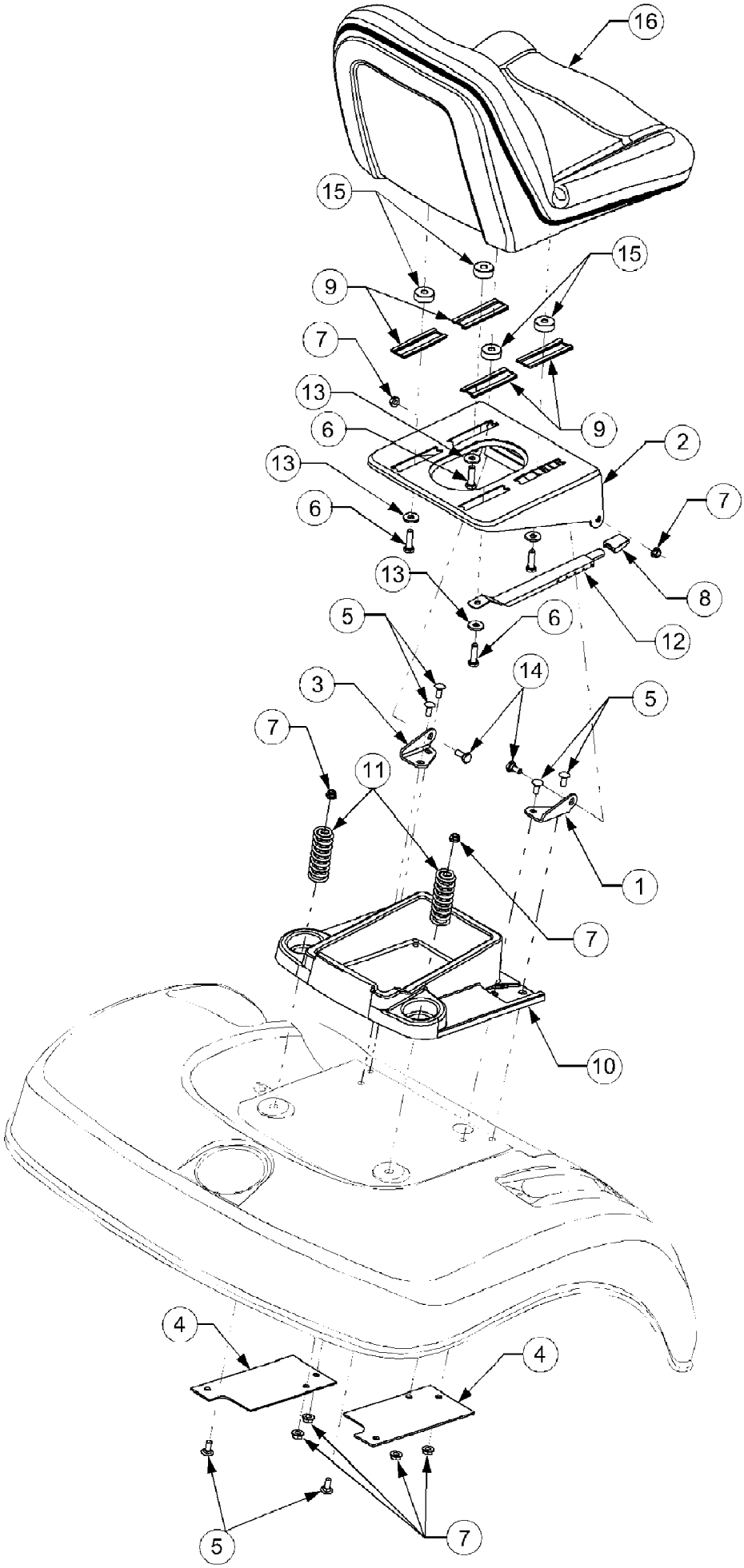

www.mymowerparts.com

For Discount Cub Cadet Parts Call 606-678-9623 or 606-561-4983

Ref #	Part Number	Qty	S/P/F	Description
1	703-2394	1		Bracket, RH Seat Pivot
2	703-2395A	1	/P	Seat, Base
	777I20310	1		Graphic, Seat Adjuster
3	703-2477	1		Bracket, LH Seat Pivot
4	703-2628	2		Bracket, Fender Reinforcement
5	710-0451	6	/P	Bolt, Carriage, 5/16-18 x .75
6	710-3120	4		Screw, Hx Cap Lock, 3/8-16 x 1.5 GR5
7	712-04054	8	/P	Nut, Hex Flange Lock, 5/16-18
8	720-0426	1	/P	Knob, Seat Adjuster
9	731-3154	4		Slide, Seat
10	731-3162	1	S	Tray, Tool
11	732-3080A	2	/P	Spring, Comp, 1.9 OD x 2.4
12	732-04100	1	S	Index Spring, Seat Adjuster
13	736-3052	4	/P	Washer, Flat, .406 x 1.0 x .105
14	738-0140	2	S	Bolt, Shoulder
15	738-04013A	4	S	Spacer, Seat Slide Shoulder
16	757-04005	1	S	Seat, High Back
	777D06883	1	/P	Graphic, Seat Back
	777D01782	1	/P	Graphic, Made in USA

www.mymowerparts.com

For Discount Cub Cadet Parts Call 606-678-9623 or 606-561-4983

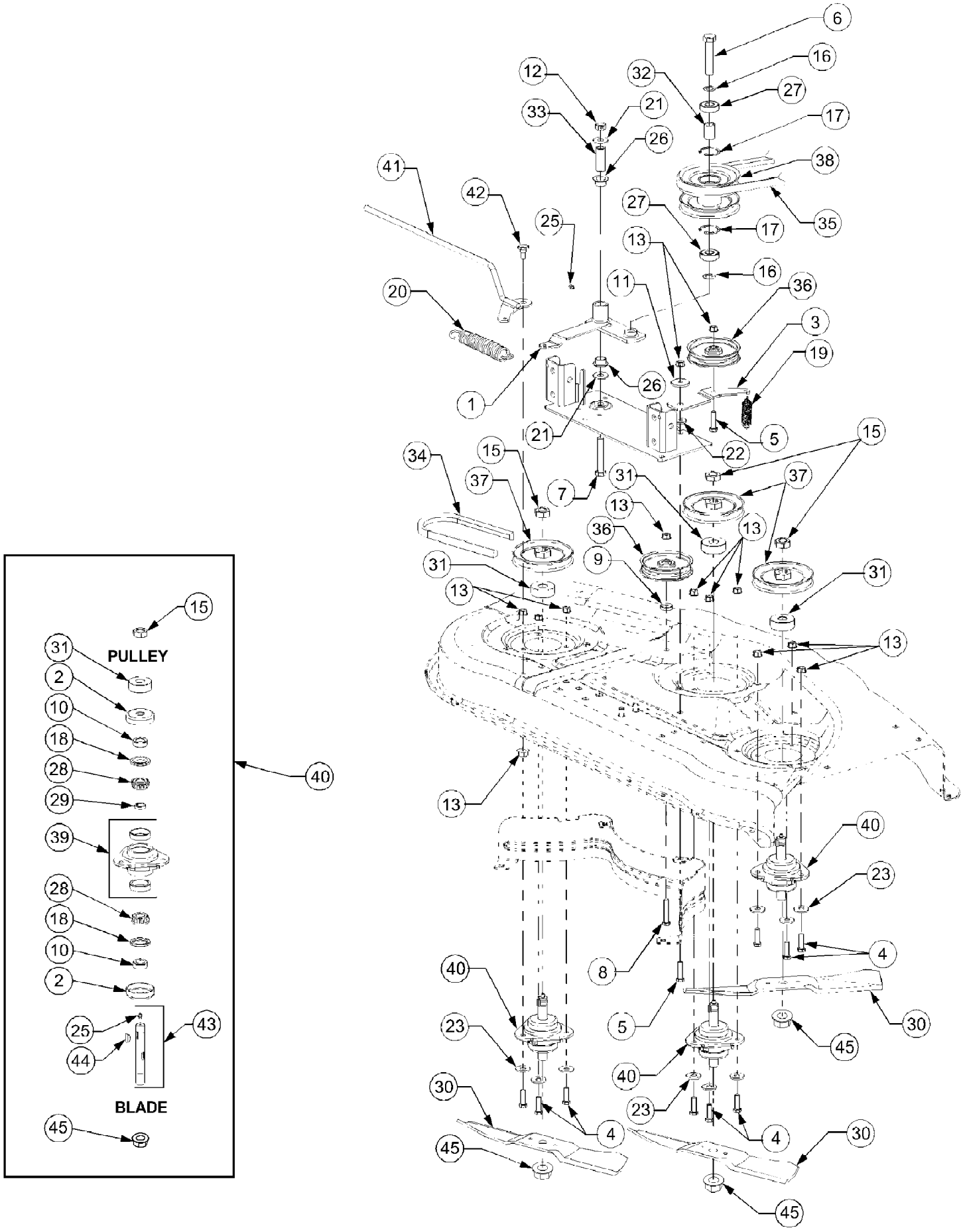

www.mymowerparts.com

For Discount Cub Cadet Parts Call 606-678-9623 or 606-561-4983

Ref #	Part Number	Qty	S/P/F	Description
1	603-0857	1	/P	Pivot Arm, Double Pulley
2	703-1387	6	S	Cup, Spindle
3	703-2579	1	S	Arm, Idler
4	710-3005	9	/P	Screw, Hex Cap 3/8-16 x 1.25 GR5
5	710-0520	2	/P	Screw, Hex Cap, 3/8-16 x 1.5 GR5
6	710-0923	1	/P	Screw, Hex Cap, 5/8-18 x 3 GR5
7	710-1010	1	/P	Screw, Hex Cap, 1/2-20 x 3 GR8
8	710-3144	1	/P	Screw, Hex Cap, 3/8-16 x 2
9	711-0242	1	S	Spacer, .380 ID x 1 OD x .32
10	711-3171A	6		Spacer, .755 ID x 1.25 OD x .44
11	711-3272A	1	S	Spacer, Shoulder
12	712-0239	1	S	Nut, Hex Center Lock, 1/2-20
13	712-0431	13	S	Nut, Hex Flanged Lock, 3/8-16
15	712-3026	3	S	Nut, Hex Jam, 3/4-16 GR5
16	736-0237	2	/P	Washer, Flat, .65 x 1.25 x .075
17	716-3020	2	S	Snap Ring, Internal
18	721-3018A	6	S	Seal, Oil, 1.25 x 1.874 x .25
19	732-0478	1	S	Spring, Extension, .75 OD x 6.12
20	732-0861	1		Spring, Extension, 1.25 OD x 8.15
21	736-0179	2	S	Washer, Flat, .531 x 1.25 x .1 Thk
22	736-0258	1	/P	Washer, Flat, .385 x 1 x .127 Thk
23	736-3052	9	/P	Washer, Flat, .406 x 1.0 x .105
25	737-3000	4	S	Fitting, 3/16 Drive Lube
26	741-0338	2	/P	Bearing, Flange, 3/4 ID x .53
27	741-1122	2		Bearing, Ball, .62 x 1.57 x .470
28	741-3028	6	S	Cone, Bearing
29	741-3030	3	S	Spacer, Bearing
30	742-3019	3	S	Blade, Low Lift, 16.5"
	742-3025	3	S	Blade, High Lift, 16.5"
	759-3677	3	S	Blade, Hard Coated, 16.5"
31	748-3020	3	S	Spacer
32	750-3132	1	S	Spacer, Pulley, .635 ID x .88 OD x
33	750-3136	1	S	Spacer, Idlr Brkt, .51 ID x .75 OD x
34	754-3041	1	S	Belt, Spindle, A-Section x 105"
35	754-04041	1	S	Belt, PTO, B-Section x 111.2"
36	756-3005	2	/P	Pulley, Flat Idler, 4.06 OD
37	756-3046	3		V-Pulley, 4.70 OD
38	756-3116	1	/P	Pulley, Double
	737-3000	1	S	Fitting, 3/16 Drive
39	759-3226	3	S	Housing w/Cups, Spindle
40	759-3665	3	S	Spindle Ass'y, Blade
41	603-0203	1	S	Handle, Tension
42	738-0143	1	/P	Bolt, Shoulder, .498 Dia. x .340
43	759-3369	3	S	Kit, Shaft w/Seal
44	714-0135	3	S	Key, #91 Woodruff, 1/4 x 3/4
45	712-3078	3	/P	Nut, Hex Flange, 3/4-16 (Optional)

www.mymowerparts.com

For Discount Cub Cadet Parts Call 606-678-9623 or 606-561-4983

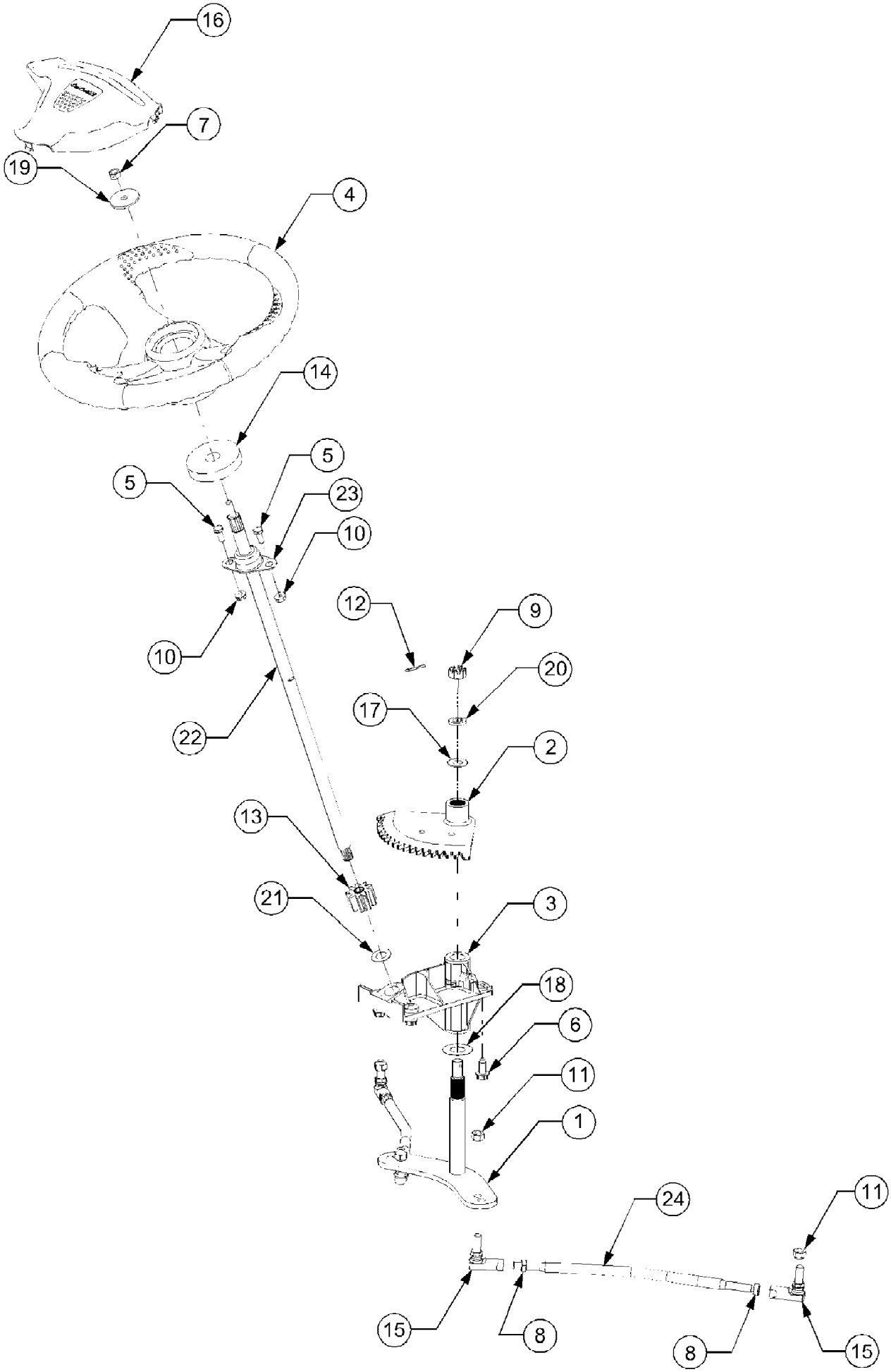

www.mymowerparts.com

For Discount Cub Cadet Parts Call 606-678-9623 or 606-561-4983

Ref #	Part Number	Qty	S/P/F	Description
1	603-0064	1		Arm Assy, Lower Steering
2	603-0250	1	/P	Segment Assy, 18T Steering
3	619-04079	1	S	Housing Assy,
	737-3000	1	S	Fitting, Grease, 3/16 Drive Type
	748-0108	1	S	Bearing, Flange, .503 ID
	748-3007A	2	S	Bearing, Bronze Flange, .75 ID
4	631-04008	1	S	Wheel, Steering, Soft Grip
5	710-3008	2	/P	Screw, Hex Cap, 1/4 - 5/16 - 18 x .75, GR5
6	710-1260A	4	/P	Screw, Hex Wash. Hd. Tapp 5/16 - 18 x .75
7	712-0237	1	S	Nut, Hex Center Lock, 5/16-18
8	712-0711	4	/P	Nut, Hex Jam, 3/8-24 GR2
9	712-3012	1	S	Nut, Hex Slotted, 1/2-20 GR5
10	712-3004A	2	/P	Nut, Hex Flange Lock, 5/16 - 18
11	712-3054	4	/P	Nut, Hex Lock, 3/8-24 GR5
12	714-3004	1		Pin, Cotter, 3/32 Dia x 1.25
13	717-04086	1	S	Pinion, Steering
14	722-3019	1		Gasket, Steering
15	723-0156	4	S	Joint, Ball, 3/8-24
16	731-04532	1	S	Cover, Steering Wheel
17	736-0272	1	S	Washer, Flat, .510 x 1 x .06 Thk
18	736-0351	1	S	Washer, Flat, .760 x 1.5 x .03 Thk
19	736-0242	1	/P	Washer, Flat, Bell
20	736-0921	1	S	Washer, Lock, 1/2
21	736-3013	1	S	Washer, Flat, .531 x 1 x .027 Thk (use if required)
22	738-04064	1	S	Shaft, Steering
23	741-3025	1		Bearing, Flange
25	747-3171	2		Rod, Tie

www.mymowerparts.com

For Discount Cub Cadet Parts Call 606-678-9623 or 606-561-4983

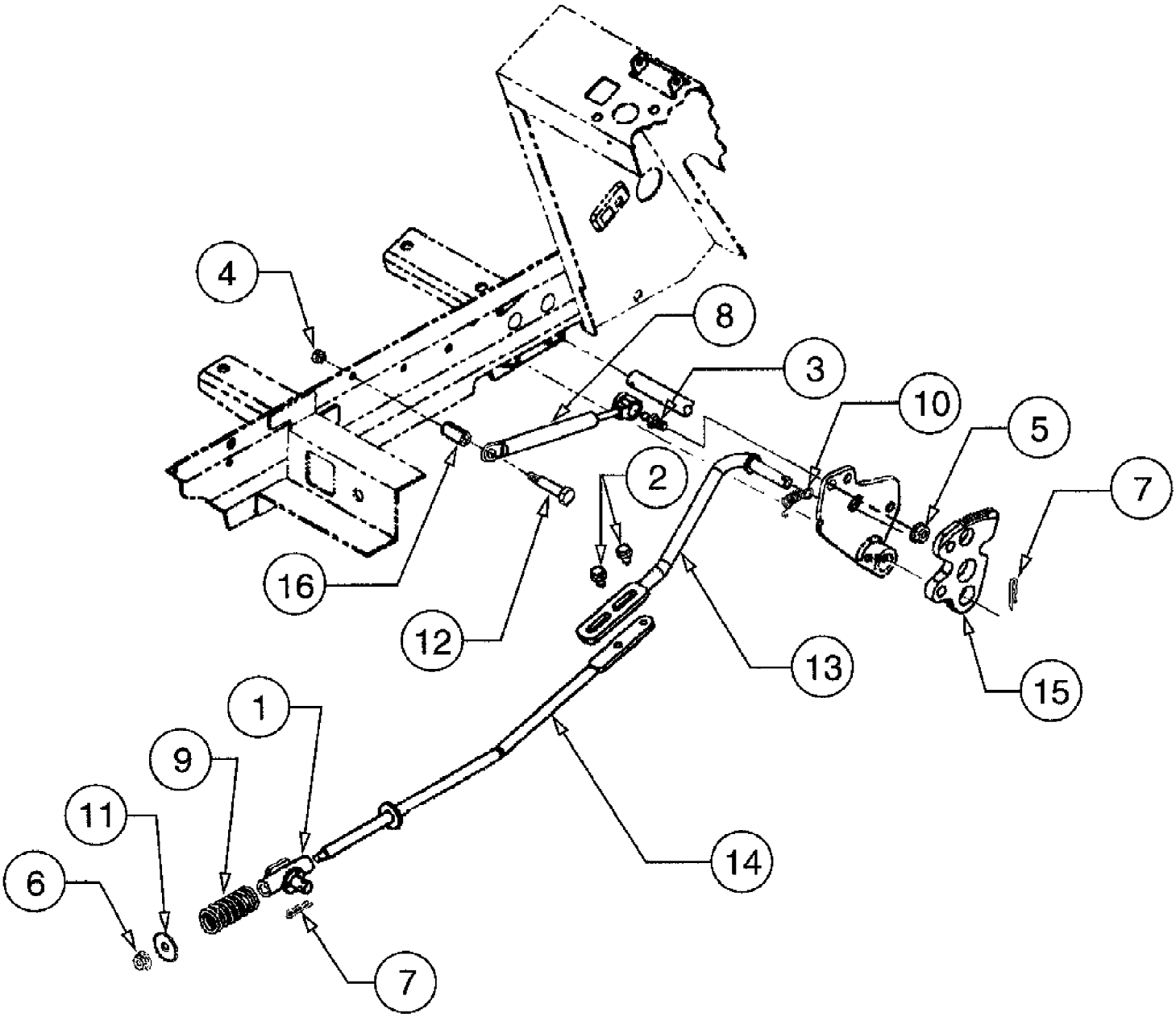

www.mymowerparts.com

For Discount Cub Cadet Parts Call 606-678-9623 or 606-561-4983

Ref #	Part Number	Qty	S/P/F	Description
1	603-0272	1		Pivot Assembly
2	710-0599	2	/P	Screw, Hex Wsh Hd Tapp, 1/4-20 x .5
3	710-3170	1		Screw, Ball, 5/16-18 x.56
4	712-0271	1	/P	Nut, Hex Sems, 1/4-20
5	712-3004A	1	/P	Nut, Hex Flange Lock, 5/16-18 GR5
6	712-3027	1	S	Nut, Hex Flange Lock, 1/4-20
7	714-0104	2	S	Pin, Internal Cotter
8	727-3090	1	/P	Cylinder, Damper
9	732-3094	1	S	Spring, Compression, .63 ID x 2
10	732-3118	1		Spring, Extension, 3/8 OD x 1.44
11	736-3092	1	/P	Washer, Flat, .265 x 1 x .030
12	738-0560	1	S	Bolt, Shoulder, .374 Dia x 1.375
13	747-3304	1		Rod, Front Control
14	747-3309	1		Rod, Rear Hydro Control
15	748-3070A	1		Plate, Cruise
16	750-0434	1	/P	Spacer, Split Tubing, .375 ID x 1.04

www.mymowerparts.com