www.mymowerparts.com

FORM MS-4246-2/79
REPLACES FORM MS-4246-8/78
FILE IN SECT. 2 OF SERVICE MANUAL

80100 to 80199
81100 to 81199

Illustrated Parts List

Model Series

80100 to 80199

TYPE NUMBERS
0010 through 0015
0110 through 0247
908000 through 908094

81100 to 81199

TYPE NUMBERS
0110 through 0139
908500 through 908577

TO FIND

THE CORRECT NUMBER OF THE PART YOU NEED:

FOLLOW THE INSTRUCTIONS BELOW

A. Refer to Engine Model, Type and Code Number that is stamped on the blower housing of engine. Engine type numbers such as 0123 01 are listed herein only as 0123. The two digits (01 or 02, etc.) to the right of the space are not needed for parts identification. Then use the Illustrated Parts List covering these Model Series.

B. Refer to Illustrated Parts section and compare the old part with illustration. The number on the illustration is the Reference Number. Assemblies include all parts shown in frames. All parts shown in assembly frames on which individual reference numbers are given can be purchased separately.

C. After the Reference Number has been identified, refer to the Numerical Parts List, where Reference and Master Part Numbers are listed. THE MASTER PART IS USED ON ALL TYPE NUMBERS EXCEPT THOSE TYPE NUMBERS UNDER "NOTE".

D. If a "Note" appears below the Master Part Number, this means that this part differs from the Master Part for certain types. If the Type Number is listed under "Note", order the part referred to.

E. If the Engine Type Number does not appear after any part number listed under "Note", use the Master Part Number.

F. For Type Numbers higher than those covered by this book, please refer to the factory if you are unable to identify the part by comparison.

PRINTED IN U.S.A.

COPYRIGHT ©

ORIGINAL BRIGGS & STRATTON SERVICE PARTS

K&T Saw Shop 606-678-9623 or 606-561-4983

.mymowerparts.com

80100 to 80199
81100 to 81199

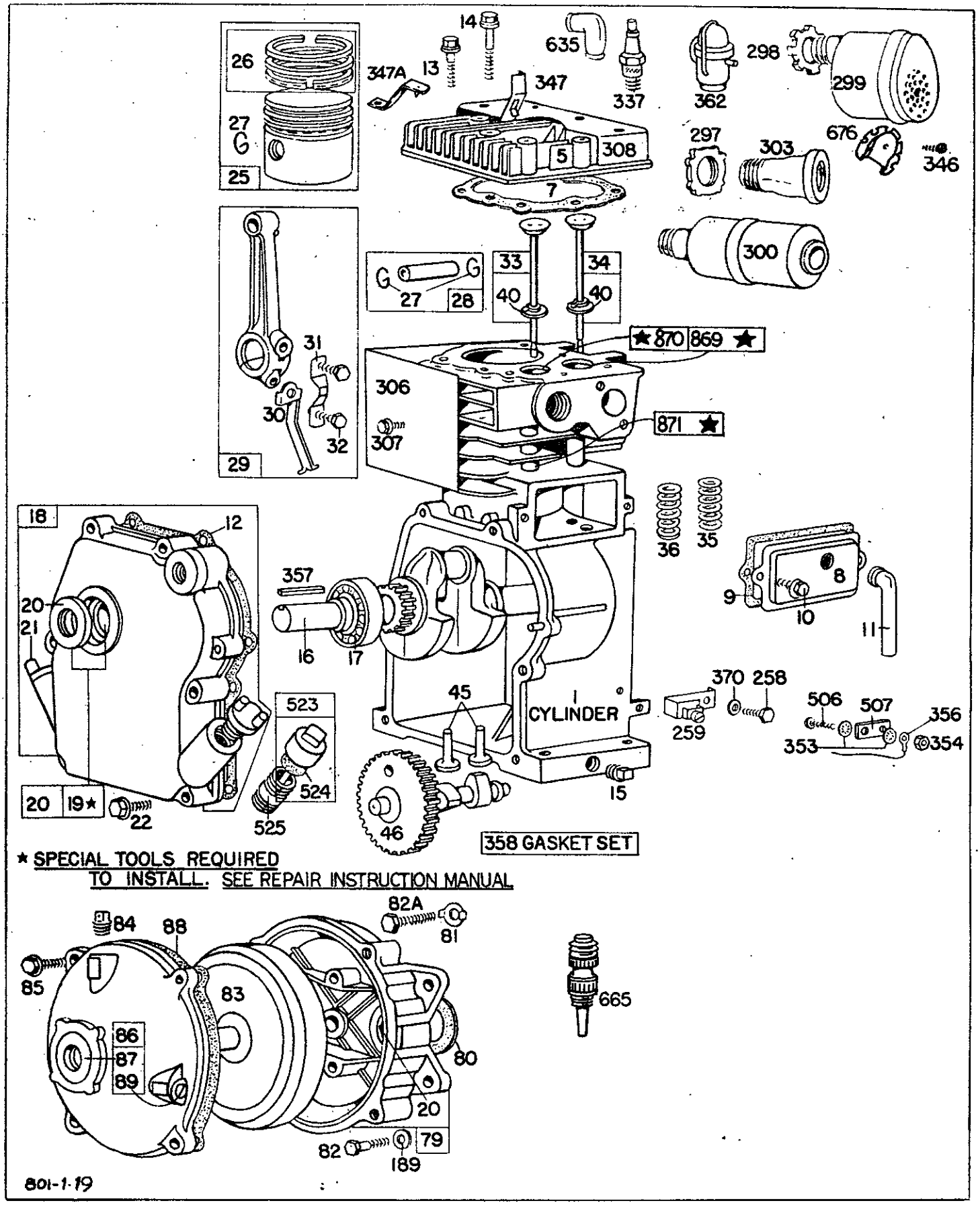

Assemblies include all parts shown in frames.

K&T Saw Shop 606-678-9623 or 606-561-4983

www.mymowerparts.com

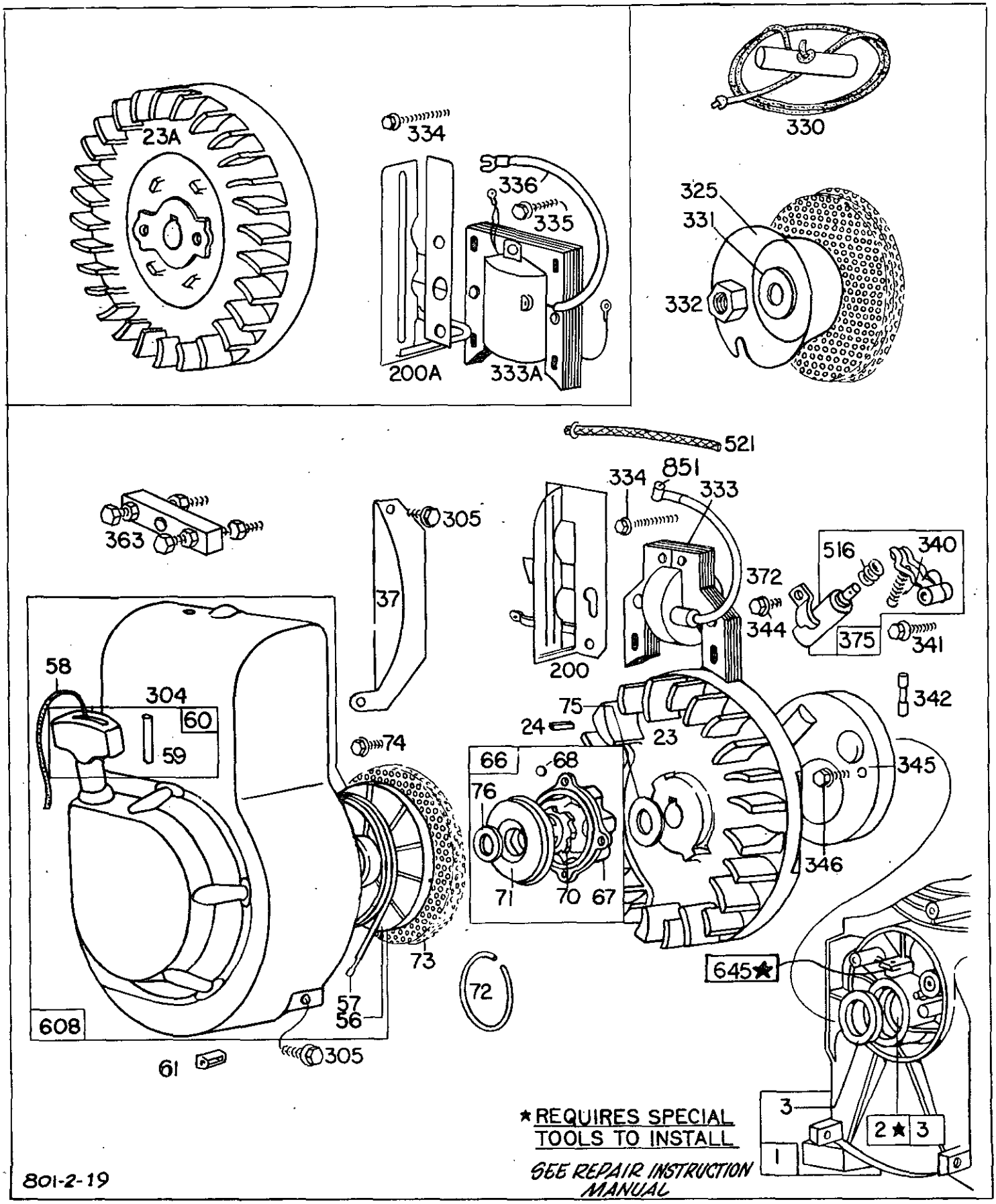

Assemblies include all parts shown in frames.

K&T Saw Shop 606-678-9623 or 606-561-4983

w.mymowerparts.com

80100 to 80199
81100 to 81199

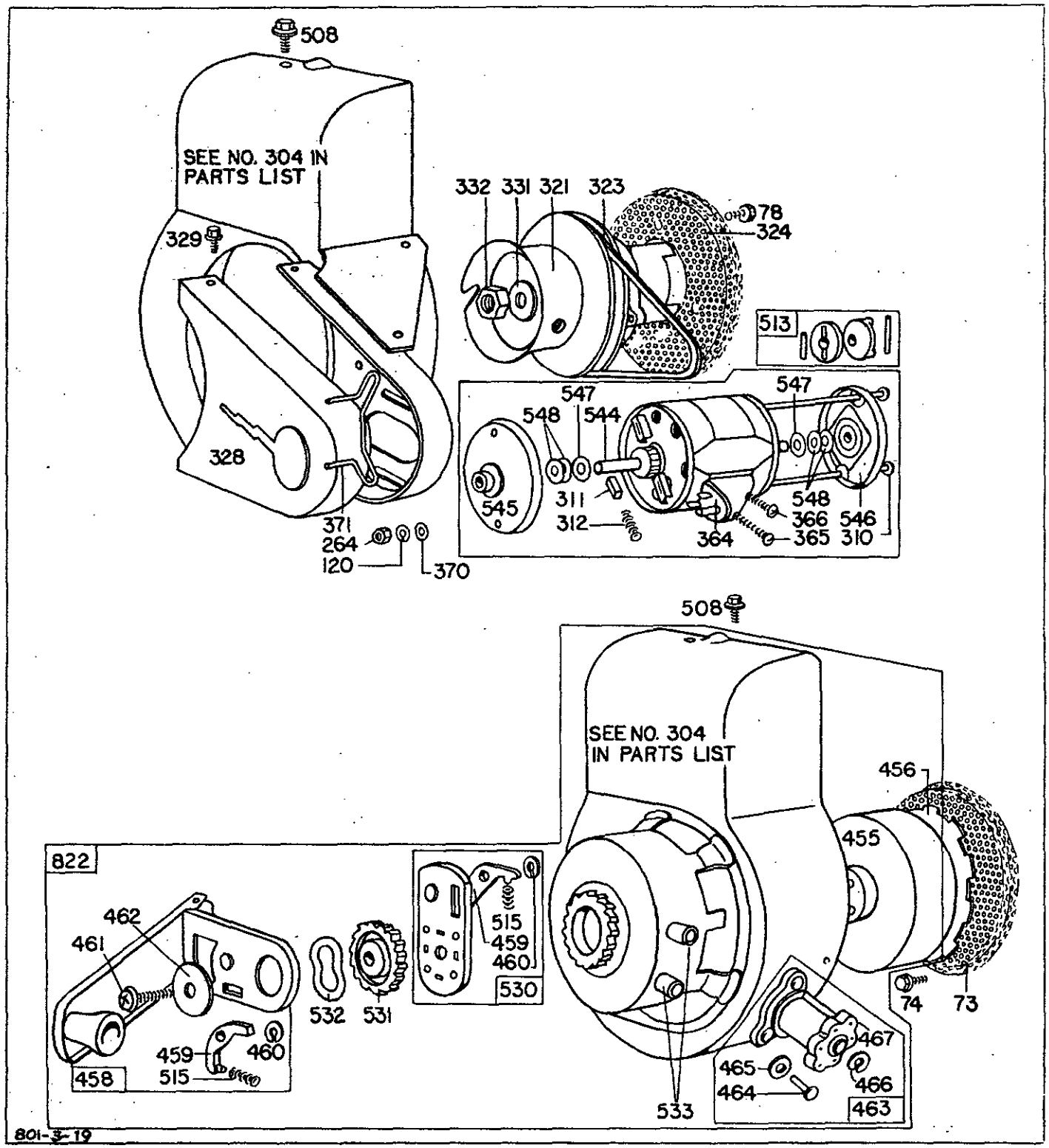

Assemblies include all parts shown in frames.

K&T Saw Shop 606-678-9623 or 606-561-4983

www.mymowerparts.com

80100 to 80199
81100 to 81199

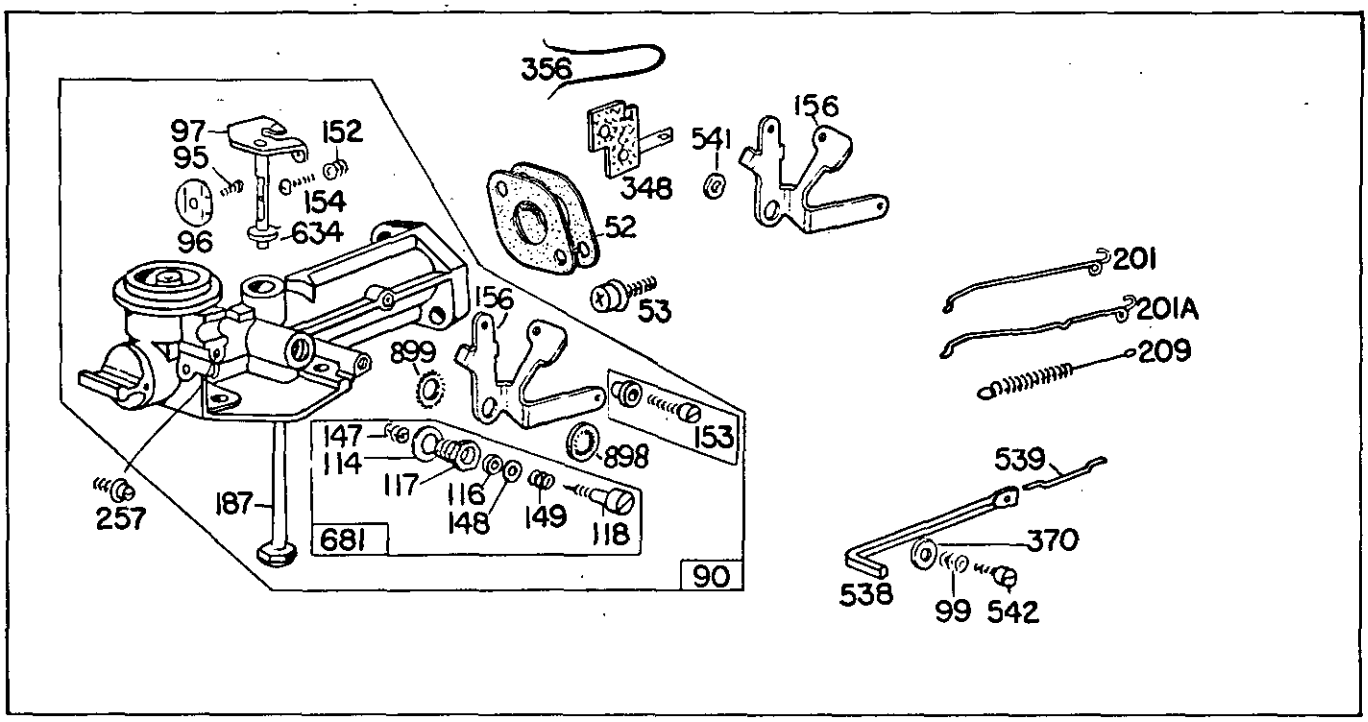

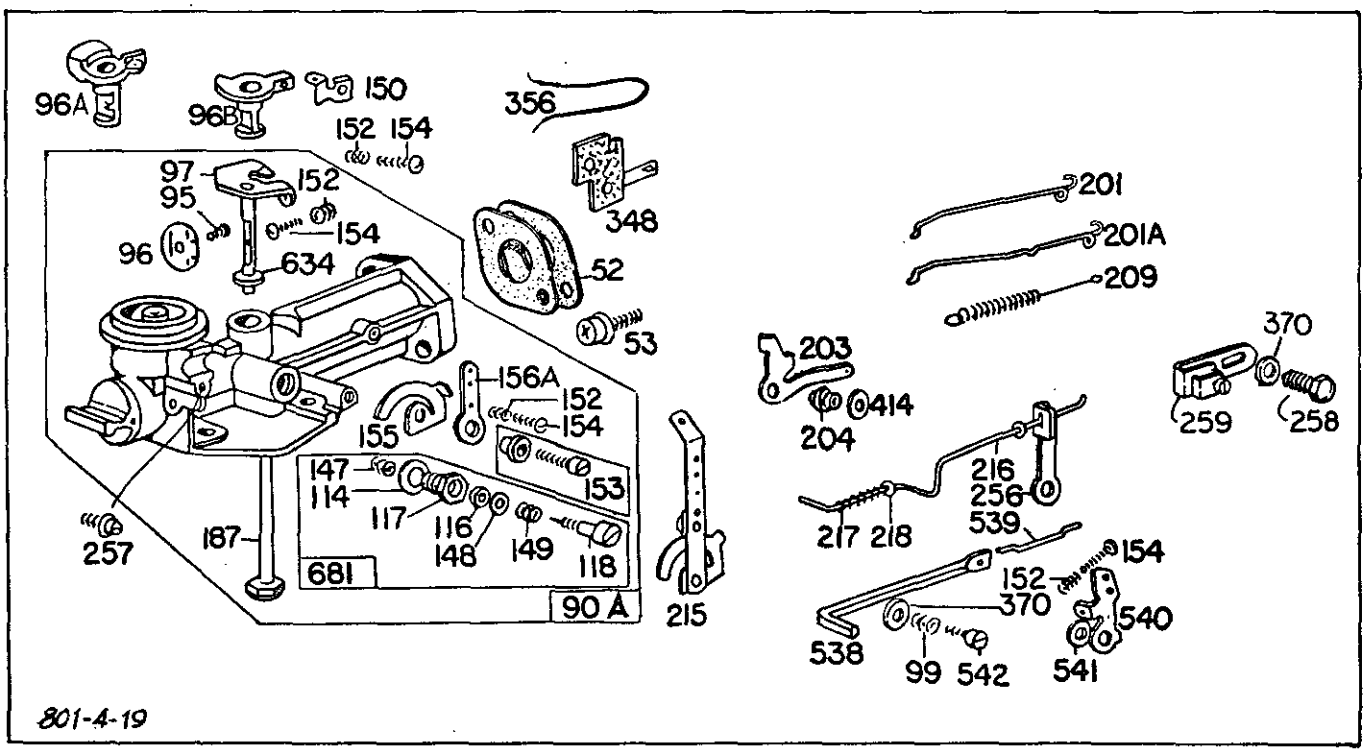

Assemblies include all parts shown in frames.

K&T Saw Shop 606-678-9623 or 606-561-4983

w.mymowerparts.com

80100 to 80199
81100 to 81199

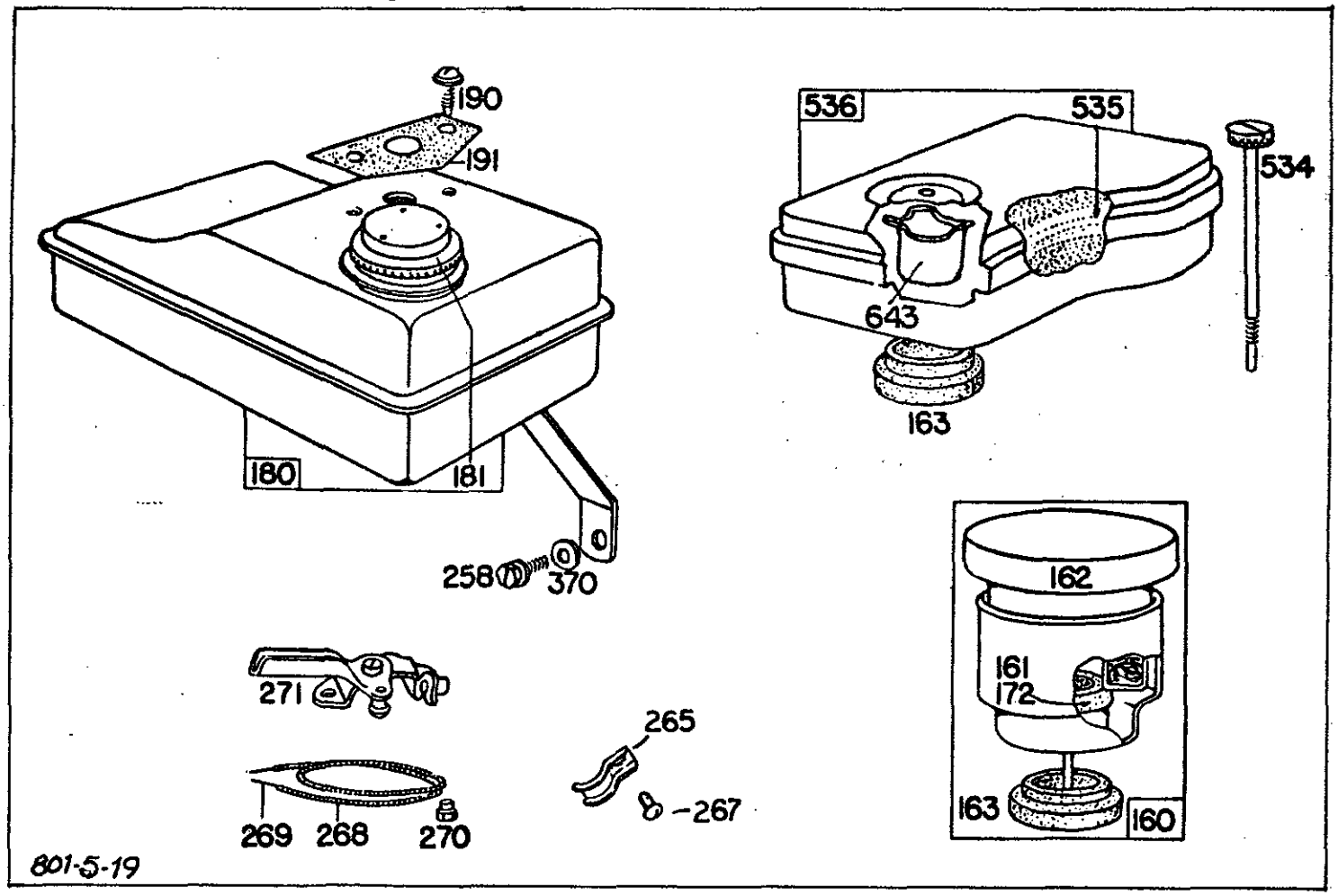

Assemblies include all parts shown in frames.

K&T Saw Shop 606-678-9623 or 606-561-4983

www.mymowerparts.com

REF. NO. 1 – 16

REF. NO.	PART NO.	DESCRIPTION
1	**296561**	Cylinder Assembly Used on *Model 80100* Series engines after Serial No. 5810140.
	Note:	**294233** Cylinder Assy. Used on *Model 80100* Series engines before Serial No. 5810150.
	296610	Cylinder Assembly Used on *Model 81100* Series engines.
2	**293708**	Bushing–Cylinder
3	**89660**	Seal–Oil
5	**210812**	Head–Cylinder
7	***27670**	Gasket–Cylinder Head
8	**294178**	Breather–Valve Chamber
	Note:	Breather for type Nos. 908548, 908554 is supplied by the equipment manufacturer.
9	***27549**	Gasket–Valve Cover
10	**93394**	Screw–Breather Mtg. Sem
11	**66638**	Tube–Breather
	Note:	**295217** Breather Tube and Spacer Used on *Model 80100* Series type Nos. 0015, 0143, 0156, 0157, 0160, 0175, 0196, 0233, 0235, 0244, 0245, 908019, 908025, 908032, 908034, 908067, 908079, 908084; also used on *Model 81100* Series type Nos. 908520, 908531, 908538, 908539, 908549, 908556, 908564, 908571.
12	***27586**	Gasket–Crankcase–.015" thick (Standard)
	***27617**	Gasket–Crankcase–.005" thick
	***27618**	Gasket–Crankcase–.009" thick
	Note:	Gasket–Crankcase for type Nos. 908548, 908554 is supplied by the equipment Manufacturer.
13	**93111**	Screw–Cylinder Head (1-15/16" long)
	Note:	**93583** Stud–Cylinder Head (1) **22963** Washer (1) Used on type No. 0135.
14	**93113**	Screw–Cylinder Head (2-5/16" long)
15	**91249**	Plug–Pipe, 1/4" Std. Square head
	Note:	**93448** Plug–Oil Drain Used on type Nos. 0173, 0236, 0240, 0242, 0243, 0246.
16	**260257**	Crankshaft
	Note:	Crankshaft for type Nos. 908036, 908048 is supplied by the equipment manufacturer. **260104** Crankshaft Used on *Model 80100* Series type Nos. 0110, 0115, 0165, 908010, 908012, 908035, 908057, 908061, 908070; also used on *Model 81100* Series type Nos. 0110, 0115, 0139, 908510, 908512, 908513, 908524, 908534, 908546. **260106** Crankshaft Used on *Model 80100* Series type Nos. 0120, 908015, 908028; also used on *Model 81100* Series type Nos. 0120, 908515. **260107** Crankshaft Used on *Model 80100* Series type Nos. 0153, 908060, 908071; also used on *Model 81100* Series type Nos. 0135, 908573. **260109** Crankshaft Used on *Model 80100* Series type Nos. 0170, 908087. **260110** Crankshaft Used on *Model 80100* Series type Nos. 0121, 0136, 908016, 908048, 908092; also used on *Model 81100* Series type Nos. 0121, 908516, 908545. **260114** Crankshaft Used on *Model 80100* Series type Nos. 0125, 908017, 908056; also used on *Model 81100* Series type Nos. 0125, 0134, 908517, 908569. **260115** Crankshaft Used on *Model 80100* Series type Nos. 0126, 0155, 0162, 0172, 0179, 0182, 0212, 908018, 908020, 908023, 908038, 908055, 908063, 908081; also used on *Model 81100* Series type Nos. 0126, 908518. **260145** Crankshaft Used on *Model 81100* Series type No. 908521. **260182** Crankshaft Used on *Model 80100* Series type Nos. 0225, 0226, 0230. **260187** Crankshaft Used on *Model 80100* Series type Nos. 0201, 0209, 0218, 0232. **260268** Crankshaft Used on *Model 80100*

* Included in Gasket Set–Part No. 297275.

K&T Saw Shop 606-678-9623 or 606-561-4983

v.mymowerparts.com

REF. NO.	PART NO.	DESCRIPTION
		Series type No. 908024.
		260395 Crankshaft Used on *Model 80100* Series type No. 908040; also used on *Model 81100* Series type No. 908570.
		260488 Crankshaft Used on *Model 80100* Series type Nos. 0146, 908022, 908039; also used on *Model 81100* Series type Nos. 908555, 908566.
		260489 Crankshaft Used on *Model 80100* Series type Nos. 0148, 0196, 908049, 908054, 908080, 908094.
		260492 Crankshaft Used on *Model 80100* Series type Nos. 0133, 0135, 0137, 0141, 0144, 0149, 0150, 0156, 0158, 0159, 0166, 0167, 0169, 0173, 0174, 0178, 0181, 0183, 0185, 0186, 0187, 0189, 0195, 0198, 0199, 0202, 0203, 0204, 0205, 0208, 0211, 0213, 0214, 0215, 0216, 0217, 0220, 0221, 0222, 0227, 0228, 0229, 0231, 0233, 0234, 0236, 0237, 0239, 0240, 0241, 0242, 0243, 0245, 0247, 908029, 908051, 908065, 908066, 908068, 908082, 908083, 908090, 909091; also used on *Model 81100* Series type Nos. 0132, 908525, 908526, 908527, 908528, 908531, 908533, 908537, 908557, 908558.
		260512 Crankshaft Used on *Model 81100* Series type No. 908554.
		260562 Crankshaft Used on *Model 80100* Series type No. 0206.
		260932 Crankshaft Used on *Model 80100* Series type Nos. 0163, 0184, 0194, 0219, 908027, 908037; also used on *Model 81100* Series type Nos. 0136, 908564, 908574, 908577.
17	99158	Bearing–Ball
18	294305	Cover Assy. – Crankcase Used on Model 80101, 80102, 80103, 81101, 81102, 81103 Series.
	Note:	**294306** Cover Assy. – Crankcase Used on Model 80131, 80132, 81131, 81132, Series.
		294307 Cover Assy. – Crankcase Used on Model 80111, 80112, 80151, 80152, 81111, 81112, 81151, 81152 Series.
		298281 Cover Assy. – Crankcase Used on *Model 80190* Series type Nos. 0160, 0161.
19	293708	Bushing–Crankcase Cover
	Note:	Parts 220538 and 293708 Bushings require special tools for installation.
	Note:	**220538** Bushing–Crankcase Cover Used on Model 80111, 80112, 80151, 80152, 81111, 81112, 81151, 81152 Series.
20	299819	Seal–Oil
	Note:	**293740** Seal–Oil Used on Model 80131, 80132, 81131, 81132 Series.
		294207 Oil Seal and Spacer Used on Model 80111, 80112, 81111, 81112 Series.
		298041 Seal–Oil Used on Auxiliary P.T.O. Shaft on *Model 80190* Series type Nos. 0160, 0161.
21	66768	Plug–Oil Filler
22	93032	Screw–Crankcase Cover Mounting Sem
	Note:	**92747** Screw–Crankcase Cover Mounting Sem Used in two top holes to mount cover on Model 80111, 80112, 80151, 80152, 81111, 81112, 81151, 81152 Series.
23	296884	Flywheel–Magneto (Used after Serial No. 6212310.)
23A	295936	Flywheel–Magneto (Used before Serial No. 6212310.)
	Note:	**293205** Flywheel–Magneto Used on *Model 81100* Series type Nos. 908548, 908554.
24	61760	Key–Flywheel
25	295587	Piston Assembly–Std. Used on *Model 80100* Series.
	Note:	**295455** Piston Assy. – Standard Used on *Model 81100* Series.
	295588	Piston Assembly–.010" O.S. Used on *Model 80100* Series.

K&T Saw Shop 606-678-9623 or 606-561-4983

www.mymowerparts.com

REF. NO.	PART NO.	DESCRIPTION
	Note:	**295456** Piston Assy.–.010" O.S. Used on *Model 81100* Series.
	295589	Piston Assembly–.020" O.S. Used on *Model 80100* Series.
	Note:	**295457** Piston Assy.–.020" O.S. Used on *Model 81100* Series.
	295590	Piston Assembly–.030" O.S. Used on *Model 80100* Series.
	Note:	**295458** Piston Assy.–.030" O.S. Used on *Model 81100* Series.
MODEL 80100 SERIES RING SETS:		
	Note:	For Chrome Piston Ring Set–Standard Size–order Part No. 297201.
26	**294232**	Ring Set–Standard Piston
	294224	Ring Set–.010" O.S. Piston
	294225	Ring Set–.020" O.S. Piston
	294226	Ring Set–.030" O.S. Piston
MODEL 81100 SERIES RING SETS:		
	Note:	For Chrome Piston Ring Set–Standard Size–order Part No. 297201.
	295657	Ring Set–Std. Piston
	295658	Ring Set–.010" O.S. Piston
	295659	Ring Set–.020" O.S. Piston
	295660	Ring Set–.030" O.S. Piston
27	**26026**	Lock–Piston Pin
28	**298909**	Pin Assembly–Piston–Standard
	298908	Pin Assembly–Piston–.005" O.S.
29	**294367**	Rod Assembly–Conn.
	Note:	For Connecting Rod with .020" undersize Crankpin Bore–order No. 296079.
30	**220670**	Dipper–Connecting Rod
31	**220756**	Lock–Conn. Rod Screw
32	**92296**	Screw–Connecting Rod
33	**296676**	Valve–Exhaust (grooved stem–includes retainer)
	Note:	**26973** Valve–Exhaust (w/hole in stem) Used on *Model 81100* Series type No. 908566.
		260075 Valve–Exhaust (w/hole in stem) Used on *Model 81100* Series type Nos. 0134, 908569.
34	**296677**	Valve–Intake (grooved stem–includes retainer)
	Note:	**23386** Valve–Intake (w/hole in stem) Used on *Model 80100* Series before Serial No. 5810150.
		230101 Valve–Intake (w/hole in stem) Used on *Model 81100* Series type Nos. 0134, 908569.
35	**260552**	Spring–Intake Valve
36	**26478**	Spring–Exhaust Valve
	Note:	**26826** Spring–Exhaust Valve Used on *Model 81100* Series type Nos. 0134, 908566, 908569.
37	**220971**	Guard–Flywheel
40	**93312**	Retainer–Valve Spring Used with valves with groove in stem.
	Note:	**23184** Retainer–Valve Spring
		23187 Pin–Valve Spring Retainer Used with valves with hole in stem.
		292259 Roto Cap–Exhaust Valve
		230126 Pin–Exhaust Valve Roto Cap Retainer
		230127 Retainer–Exhaust Valve Roto Cap Used on *Model 81100* Series type Nos. 0134, 908566, 908569.
45	**230173**	Tappet–Valve
46	**210453**	Gear–Cam
	Note:	**211337** Gear–Cam Used on *Model 80190* Series type Nos. 0160, 0161.
52	***27355**	Gasket–Intake Elbow (2 used)
53	**93357**	Screw–Carburetor Mounting Sem
56	**280117**	Pulley–Rewind Starter Used after Code No. 6506301.
	Note:	**290488** Pulley–Rewind Starter Used before Code No. 6507011.
57	**294303**	Spring–Rewind Starter
58	**66694**	Rope–Starter (47-1/8" long) Used after Serial No. 6506301.
	Note:	**294584** Rope–Starter (47-1/8" long) Used before Serial No. 6507011. If longer rope is needed, order No. 66684 (used after Serial No. 6506301) and cut to required length. (Before Serial No. 6507011 order and use No. 66574).
59	**230228**	Pin–Starter Grip
60	**393152**	Grip–Starter Rope

* Included in Gasket Set–Part No. 297275.

K&T Saw Shop 606-678-9623 or 606-561-4983

w.mymowerparts.com

80100 to 80199
81100 to 81199

REF. NO. 61 – 90A

REF. NO.	PART NO.	DESCRIPTION
61	68618	Bumper–Starter Pulley (Used only with Steel Pulley)
66	298310	Clutch Assy.–Rewind and Wind-Up Starter Used after Serial No. 6405220.
	296468	Clutch Assy.–Rewind and Wind-Up Starter Used before Serial No. 6405250.
67	212131	Housing–Starter Clutch Used after Serial No. 6405220.
	Note:	**210400** Housing–Starter Clutch Used before Serial No. 6405250.
68	63770	Ball–Clutch
70	298436	Ratchet–Rewind and Wind-Up Starter Used after Serial No. 6405220.
	Note:	**296597** Ratchet–Rewind Starter Used before Serial No. 6405250.
71	221653	Washer–Clutch Retainer Used after Serial No. 6405220.
	Note:	**221301** Washer–Clutch Retainer Used with Square Shank Ratchet. Used before Serial No. 6405250.
		220575 Washer–Clutch Retainer Used with 7 Point Shank Ratchet.
72	26032	Spring–Clutch Retainer Used before Serial No. 6405250.
73	221661	Screen–Rotating Used after Serial No. 6405220.
	Note:	**220648** Screen–Rotating Used before Serial No. 6405250.
74	93490	Screw–Rotating Screen Mounting Sem
75	220865	Washer–Spring Used to Lock Rewind Starter Clutch.
76	68238	Washer–Ratchet Sealing Used after Serial No. 6405220.
	Note:	**270045** Washer–Ratchet Sealing Used on *Model 80100* Series type Nos. 908075, 908076, 908077.
78	93705	Screw–Pulley Screen Mounting Sem
79	290779	Case Assembly–Gear
80	27667	Gasket–Gear Case
81	220234	Lock–Gear Case Mounting Screw
82	91541	Screw–Cap, Hex. Hd. –5/16-24 x 7/8"
82A	92279	Screw–Cap, Hex. Hd. –5/16-24 x 1-1/2"
83	211293	Shaft Assembly–Drive
	Note:	**211338** Shaft Assy. – Drive Used on *Model 80100* Series type No. 908081.
84	92617	Plug–Breather
85	92747	Screw–Gear Case Cover Mounting Sem
86	291730	Cover Assembly–Gear Case
87	19011	Seal–Oil
88	27313	Gasket–Gear Case Cover
89	93448	Plug–Oil Drain, 1/4" Pipe Thread Used after Serial No. 6304170.
	Note:	**92015** Plug–Oil Drain, 1/8" Pipe Thread Used before Serial No. 6304180.
90	393974	Carburetor Assembly (Uses **222955** Ref. 156 Lever)
90A	295281	Carburetor Assembly (Manual Choke)
	Note:	The carburetor on *Model 80100* Series type Nos. 908036, 908046; also used on *Model 81100* Series type Nos. 908548, 908554 is supplied by the equipment manufacturer. **295490** Carburetor Assy. (Manual Choke) Used on *Model 80100* Series type Nos. 0132, 0133, 0134, 0139, 0144, 0151, 0152, 0154, 0155, 0156, 0157, 0159, 0160, 0180, 0183, 0184, 0186, 0187, 0189, 0191, 0195, 0199, 0204, 0211, 0214, 0222, 0223, 0233, 0235, 0240, 0243, 908030, 908041, 908058, 908059, 908062, 908064, 908067, 908072, 908078, 908081, 908083, 908088, 908089, 908090; also used on *Model 81100* Series type Nos. 0130, 0134, 0137, 908521, 908533, 908541, 908564, 908571, 908575. **295492** Carburetor Assy. (Choke-A-Matic) Used on *Model 80100* Series type Nos. 0130, 0131, 0135, 0137, 0141, 0143, 0147, 0150, 0168, 0169, 0173, 0174, 0175, 0176, 0178, 0181, 0185, 0198, 0200, 0201, 0202, 0203, 0205, 0206,

K&T Saw Shop 606-678-9623 or 606-561-4983

www.mymowerparts.com

REF. NO. 90A – 163

REF. NO.	PART NO.	DESCRIPTION
		0207, 0209, 0215, 0216, 0217, 0218, 0220, 0221, 0224, 0227, 0230, 0237, 0241, 0245, 0247, 908021, 908034, 908042, 908044, 908052, 908065, 908066, 908068, 908073, 908074, 908075, 908076, 908077, 908079, 908082, 908084, 908091; also used on *Model 81100* Series type Nos. 0131, 0132, 908522, 908523, 908524, 908527, 908528, 908530, 908532, 908540, 908542, 908543, 908553, 908557, 908558, 908560, 908561, 908567, 908568, 908572.
		295547 Carburetor Assy. Used on *Model 80100* Series type Nos. 0149, 0164, 0193, 0194, 0232, 0234, 908050, 908051; also used on *Model 81100* Series type Nos. 0136, 0138.
		295683 Carburetor Assy. Used on *Model 80100* Series type Nos. 0158, 0208.
		296871 Carburetor Assy. Used on type No. 908552.
		296925 Carburetor Assy. Used on *Model 81100* Series type Nos. 0133; 908556, 908576, 908577.
		297121 Carburetor Assy. Used on *Model 80100* Series type No. 0142.
		298270 Carburetor Assy. Used on *Model 80100* Series type Nos. 0140, 0167, 0171, 0177, 0192, 0196, 0197, 0213, 0229, 0236, 0242, 908093.
		391338 Carburetor Assembly Used on type No. 0244.
		391491 Carburetor Assembly Used on type Nos. 0228, 0231.
95	**93499**	Screw–Throttle Valve Mounting Sem
96	**211286**	Valve–Throttle
96A	**210719**	Throttle–Carburetor (Used after Code No. 6509301 and before Code No. 77030401)
96B	**210721**	Throttle–Carburetor Used before Code No. 6510011.
97	**392819**	Shaft and Lever–Throttle
99	**393586**	Spring (Includes Fil. Hd. Screw)
114	**65787**	Gasket–Needle Valve
116	**65978**	Packing–Needle Valve
117	**23431**	Nut–Needle Valve
118	**23433**	Valve–Needle
120	**92290**	Washer–Lock–No. 10 x 1/16 x 3/64"
147	**23432**	Seat–Needle Valve
148	**22235**	Washer–Needle Valve (2)
149	**26336**	Spring–Needle Valve
150	**220105**	Connector–Governor Link Used before Serial No. 6610121.
152	**260575**	Spring–Speed and Throttle Adjustment
153	**298031**	Screw–Carburetor Cam and Lever
154	**93527**	Screw–Machine, Rd. Hd. –5-40 x 5/8"
155	**220107**	Cam–Speed Adjuster
156	**222955**	Lever–Speed Adjuster
156A	**220949**	Lever–Speed Adjuster
	Note:	**220952** Lever–Speed Adjuster Used on type No. 0228.
160	**294870**	Cleaner Assembly–Air (with mounting stud)
	Note:	**294871** Cleaner Assy. (with mounting stud) Used on *Model 80100* Series type Nos. 908019, 908025, 908032, 908034; also used on *Model 81100* Series type Nos. 908520, 908531, 908538, 908539.
161	**293991**	Bowl–Air Cleaner
162	**294861**	Cover and Filter–Air Cleaner (with mounting stud)
	Note:	**294862** Cover and Filter–Air Cleaner (with mounting stud) Used on *Model 80100* Series type Nos. 908019, 908025, 908032, 908034; also used on *Model 81100* Series type Nos. 908520, 908531, 908538, 908539.
		297778 Cover–Carburetor Intake (with mounting stud) Used on *Model 80100* Series type Nos. 0142, 0171, 908062, 908075; also used on *Model 81100* Series type No. 908550.
163	**27660**	Gasket–Air Cleaner Mtg.

K&T Saw Shop 606-678-9623 or 606-561-4983

v.mymowerparts.com

REF. NO.	PART NO.	DESCRIPTION
	Note:	**27870** Gasket–Air Cleaner Mounting Used on *Model 80100* Series type Nos. 0015, 0143, 0156, 0157, 0160, 0175, 0196, 0233, 0235, 0244, 0245, 908019, 908025, 908032, 908034, 908067, 908079, 908084; also used on *Model 81100* Series type Nos. 908520, 908531, 908538, 908539, 908549, 908556, 908564, 908571.
172	**27795**	Gasket–Air Cleaner
180	**299708**	Tank Assembly–Fuel
	Note:	**291834** Tank Assy. – Fuel Same as **299708** Tank, but without Bottom Bracket. Used before Serial No. 6710031 except *Model 80100* Series type No. 0168 on which this tank was used before Serial No. 6706091. Tank **291834** used on all *Model 80100* Series type Nos. 0149, 0158, 0164, 0193, 0194, 0208, 0232, 0234; also used on all *Model 81100* Series type Nos. 0133, 0136, 0138. The tank on *Model 80100* Series type Nos. 908036, 908046; also those used on *Model 81100* Series type Nos. 908548, 908554 is supplied by the equipment manufacturer.
181	**298425**	Cap–Fuel Tank (1-1/2" O.D. Top) Used on engines after Serial No. 6108020.
	Note:	**69221** Cap–Fuel Tank (1-3/4" O.D. Top) Used on engines before Serial No. 6108030. **293270** Cap–Fuel Tank Used on type Nos. 0187, 0199. **297863** Cap–Fuel Tank Used on *Model 80100* Series type Nos. 0160, 0187, 0199.
187	**296476**	Pipe–Fuel Used to replace plastic pipes. **293700** Pipe–Fuel Used to replace brass pipes.
	Note:	The Fuel Pipe on *Model 80100* Series type No. 908046; also those used on *Model 81100* Series type Nos. 908548, 908554 is supplied by the equipment manufacturer.
189	**90366**	Washer–Lock– 5/16 x 1/8 x 1/16"
190	**93341**	Screw–Fuel Tank Mtg.
191	***27404**	Gasket–Fuel Tank Mtg.
200	**297310**	Blade–Governor Used on and after Serial No. 6212310.
200A	**294298**	Blade–Governor Used before Serial No. 6212310.
	Note:	**220692** Guide–Air Used on type No. 908554.
201	**260040**	Link–Governor Used on and after Serial No. 6610111.
201A	**260716**	Link–Governor Used before Serial No. 6610121.
203	**221390**	Crank–Bell Used on *Model 81100* Series type No. 908556.
	Note:	**220689** Crank–Bell Used on *Model 80100* Series type Nos. 0149, 0164, 0193, 0194, 0195, 0232, 0234, 908050, 908051; also used on *Model 81100* Series type Nos. 0136, 0138. **221147** Crank–Bell Used on *Model 80100* Series type Nos. 0158, 0208.
204	**230450**	Collar Used on *Model 81100* Series type No. 908556.
	Note:	**230531** Collar Used on *Model 80100* Series type Nos. 0158, 0208.
209	**260041**	Spring–Governor
	Note:	**260662** Spring–Governor Used on *Model 80100* Series type Nos. 0147, 0168, 0175, 0178, 0181, 0198, 0216, 0218, 0220, 0221, 908075, 908076, 908077; also used on *Model 81100* Series type No. 0131. **260687** Spring–Governor Used on *Model 80100* Series type Nos. 0141, 0168, 0174, 0176, 0209, 0215, 0224, 0237.
215	**293424**	Control–Governor
	Note:	**222110** Lever–Control **222108** Plate–Detent **230943** Lever–Bushing **261053** Link–Control **93569** Washer–Spring

* Included in Gasket Set– Part No. 297275.

K&T Saw Shop 606-678-9623 or 606-561-4983

www.mymowerparts.com

REF. NO.	PART NO.	DESCRIPTION
		91494 Screw–Lever Mtg. Used on *Model 80100* Series type Nos. 0200, 0205.
216	260188	Link–Choke (Choke-A-Matic)
217	260189	Spring–Choke Link (Choke-A-Matic)
218	220968	Washer–Choke Link (Choke-A-Matic)
256	220952	Lever–Speed Adjuster
257	93263	Screw–Machine, Fill. Hd. –10-32 x 3/8"
258	93062	Screw–Sem
259	294502	Bracket–Control Wire Casing
264	90355	Nut–Hex.–No. 10-32
268	66986	Casing–Control Wire–48" long
	Note:	If a longer casing is needed, specify length in inches; if a shorter casing is needed order No. 66986 and cut to required length.
269	26099	Wire–Control, 54" long
	Note:	If a longer wire is needed, specify length in inches; if shorter wire is needed order No. 26099 and cut to required length.
270	63426	Locknut–Control Wire Casing
271	290568	Lever Assembly–Control
297	91811	Locknut–Exhaust Elbow
298	220859	Locknut–Muffler
299	392811	Muffler–Exhaust
300	89966	Muffler–Exhaust
	Note:	**292054** Muffler–Exhaust Used on *Model 80100* Series type Nos. 0171, 0176, 0187, 0199, 908075, 908076, 908077; also used on *Model 81100* Series type Nos. 908520, 908523. **295905** Muffler–Exhaust Used on *Model 80100* Series type Nos. 0015, 0139, 0145, 0157, 0169, 0173, 0180, 0183, 0192, 0197, 0200, 0202, 0205, 0220, 0236, 0240, 0242, 0243, 0244, 0246, 908085, 908089, also used on *Model 81100* Series type No. 908552. **297934** Muffler–Exhaust Used on *Model 80100* Series type No. 908081.
303	91810	Elbow–Exhaust, 45°, Street
	Note:	**91943** Elbow–Exhaust–(90°, Street) Used on *Model 80100* Series type No. 0136.
304		Housing–Blower
	Note:	For type Numbers not listed below, see Ref. No. 608. Blower Housing on *Model 80100* Series type No. 908036; also that used on *Model 81100* Series type Nos. 908548, 908554 is supplied by the equipment manufacturer. **294263** Housing–Blower (For Rope and Rewind Starters) Used on *Model 80101, 80102, 80111, 80131, 80151, 81101, 81111, 81131, 81151* Series. **294282** Housing–Blower (For Rewind Starter) Used on *Model 80100* Series type Nos. 908020, 908036. **295190** Blower Housing and Brackets Assembly (For Electric Starter) Used on *Model 80103, 81103* Series. **296672** Housing–Blower Used on *Model 81100* Series type Nos. 908548, 908554. **296792** Housing–Blower (For Wind-Up Starter) Used on *Model 80106, 81106* Series. **296894** Housing–Blower (For Rewind Starter) Used on *Model 80100* Series type Nos. 0139, 0202, 0206, 0210, 908089.
305	93158	Screw–Sem
306	220478	Shield–Cylinder
307	93042	Screw–Cylinder Shield Mounting
308	220581	Cover–Cylinder Head
310	93239	Bolt–Case
311	295697	Brush–Starter Motor
312	260404	Spring–Brush
321	210711	Pulley–Starter
	Note:	When ordering this pulley, order Vee-Belt part No. 67228 also.
323	67228	Belt–Vee
	Note:	**67038** Belt–Vee Used on engines before Serial No. 5905040.
324	220648	Screen–Electric Starter Pulley
325	293959	Starter Pulley with Screen (1/2" hole in Pulley)

K&T Saw Shop 606-678-9623 or 606-561-4983

v.mymowerparts.com

80100 to 80199
81100 to 81199

REF. NO. 325 – 466

REF. NO.	PART NO.	DESCRIPTION
	Note:	For Pulley with Screen with 5/8" hole in pulley – order No. 298731. **221146** Pulley–Rope Starter (5/8" hole in Pulley) Used on *Model 80100* Series type No. 0166; also used on *Model 81100* Series type No. 908554.
328	**221038**	Guard–Belt
329	**93014**	Screw–Belt Guard Mounting Sem
330	**294584**	Rope–Starter
331	**62577**	Washer–Flywheel (1/2" hole)
	Note:	For Washer with 5/8" hole order No. 220865.
332	**91708**	Nut–Flywheel (1/2-20 left hand thread)
	Note:	For Flywheel Nut with 5/8-18 right hand thread order No. 92284.
333	**298502**	Armature–Magneto (Used on and after Serial No. 6212310)
333A	**291617**	Armature–Magneto (Used before Serial No. 6212310)
	Note:	Magneto Armature used on *Model 80100* Series type No. 908046; also those used on *Model 81100* Series type Nos. 908548, 908554 is supplied by the equipment manufacturer.
334	**93381**	Screw–Armature Mounting Sem
335	**93381**	Screw–Coil Lead And Armature Mtg. Sem
336	**292149**	Cable–Ignition
	Note:	This Ignition Cable is used on engines with cable not molded into the coil.
337	**298809**	Plug–Spark (with Gasket) (1-1/2" high – 37-42 M. M.)
	Note:	Spark Plugs use Ignition Cable Terminal No. 221798. **29693** Plug–Spark (with Gasket) (2" high–51 M. M.) **293918** Plug–Spark (with Gasket) (Resistor Type)
340	**26018**	Spring–Breaker Arm
341	**93381**	Screw–Breaker Arm Mounting Sem
342	**65704**	Plunger–Breaker Point
344	**93042**	Screw–Condenser Mounting Sem
345	**220366**	Cover–Breaker Point and Condenser
346	**93705**	Screw–Hex. Hd.
347	**220884**	Switch–Stop (For 1-1/2" High–37-42 M. M. Spark Plug)
	Note:	**221808** Switch–Stop (For 2" High–51 M. M. Spark Plug)
347A	**298926**	Switch–Stop (For 1-1/2" High–37-42 M. M. Spark Plug) Used on *Model 80100* Series type Nos. 0142, 0160, 0171.
	Note:	**293739** Switch–Stop (For 2" High–51 M. M. Spark Plug) Used on *Model 80100* Series type Nos. 908036, 908062, 908081; also used on *Model 81100* Series type Nos. 908521, 908550.
348	**296110**	Plate Assembly–Stop Switch Insulator
353	**92791**	Washer–Lock–Shakeproof (2)
354	**90576**	Nut–Hex. 8-32
356	**391115**	Wire–Ground
	Note:	**93167** Screw–Sem Used to fasten Ground wire to Stop Switch (Ref. No. 348) on earlier model engines.
357	**91539**	Key–3/16"–Square
358	**297275**	Gasket Set
362	**291630**	Shield–Spark Plug
363	**19069**	Puller–Flywheel (Optional Accessory)
364	**295698**	Plug–Connector
365	**93241**	Screw–Plug Mtg. (long)
366	**93240**	Screw–Plug Mtg. (short)
370	**66432**	Washer–Plain
371	**260275**	Restrictor–Belt
372	**220477**	Clamp–Condenser
373	**92987**	Nut–Condenser Term.
374	**92813**	Washer–Lock–Shakeproof No. 1210-06
375	**294628**	Breaker Points and Condenser Set
	Note:	**299061** Ignition Kit **Includes:** **294628** Point Set **65704** Plunger **61760** Key–Flywheel
414	**22398**	Washer
	Note:	**220982** Washer–Bell Crank Used on type Nos. 0158, 0208.
455	**296455**	Cup, Hub and Spring Assembly
456	**221222**	Plate–Retainer
458	**296305**	Handle Assembly–Cranking
459	**221332**	Pawl–Ratchet
460	**93272**	Retainer–Ratchet Pawl
461	**93231**	Screw–Handle Mtg.
462	**221237**	Washer–Handle Mtg.
463	**296445**	Holder Assembly–Flywheel
464	**93291**	Rivet–Holder Assy. Mounting
465	**221226**	Washer–Holder Assy. Mounting
466	**93272**	Retainer–Holder Control Knob

K&T Saw Shop 606-678-9623 or 606-561-4983

www.mymowerparts.com

REF. NO.	PART NO.	DESCRIPTION
467	211017	Knob–Control
506	90200	Screw–Machine, Fil. Hd. –8-32 x 1/2"
507	66895	Insulator
508	93294	Screw–Blower Housing Mounting Sem
513	296567	Clutch Assembly–Electric Starter
515	260537	Spring–Ratchet Pawl
516	260374	Spring–Connector
521	297973	Shielding–Ignition Cable
523	69345	Cap–Oil Filler
524	65304	Gasket–Oil Filler Cap
525	91258	Nipple–Oil Filler
530	296304	Housing Assy. –Pawl
531	230615	Ratchet–Top Starter
532	260500	Washer–Spring
533	67478	Knob–Stop
534	93322	Screw–Air Cleaner
	Note:	**93330** Screw–Air Cleaner Used on *Model 80100* Series type Nos. 0015, 0143, 0156, 0157, 0160, 0175, 0196, 0233, 0235, 0244, 0245, 908019, 908025, 908032, 908034, 908067, 908079, 908084; also used on *Model 81100* Series type Nos. 908520, 908531, 908539, 908549, 908564, 908571.
535	27987	Element–Air Cleaner
	Note:	**270067** Element–Air Cleaner Used on *Model 80100* Series type Nos. 0200, 0205.
536	296767	Cleaner Assy. –Air
	Note:	Air Cleaner on *Model 80100* Series type Nos. 908036, 908046; also that used on *Model 81100* Series type Nos. 908548, 908554 is supplied by the equipment manufacturer. **297595** Cleaner Assy. –Air Used on *Model 80100* Series type Nos. 0200, 0205.
538	260683	Rod–Speed Control (square rod)
	Note:	For Round Wire Rod, order No. 260560.
539	260684	Link–Control Rod Used only with square rod.
540	221380	Lever–Speed Adjuster
	Note:	**220678** Lever–Speed Adjuster Used on type No. 0244.
541	22398	Washer–Speed Adjuster to Carburetor
542	393586	Screw–Machine, Fil. Hd. (Includes Spring)
	Note:	**91494** Screw–Machine, Fil. Hd. –10-32 x 3/8" **221372** Clip–Speed Control Rod Used with Round Wire Control Rod
544	296769	Armature–Starter
545	296770	Case Assy. –Long Shaft End
546	296775	Case Assy. –Short Shaft End
547	270025	Washer–Fiber
548	221381	Washer–Thrust (Steel)
608	294259	Starter Assy. –Rewind (10 o'clock)
	Note:	**294337** Starter Assy. –Rewind (12 o'clock) Used on *Model 80100* Series type Nos. 0015, 0132, 0133, 0135, 0150, 0159, 0173, 0186, 0187, 0193, 0194, 0199, 0201, 0204, 0208, 0209, 0214, 0215, 0216, 0226, 0227, 0232, 0234, 0236, 0240, 0242, 0243, 908042, 908078, 908081, 908083, 908091; also used on *Model 81100* Series type Nos. 0130, 0132, 0133, 0136, 0138, 908535, 908542, 908547, 908576, 908577.
634	270167	Washer (Felt)
635	66538	Elbow–Spark Plug
643	221321	Cup–Air Cleaner
645	23513	Bushing–Plunger
665	298858	Oil Minder
676	222522	Deflector–Muffler
681	299059	Needle Valve Kit
822	296732	Starter Assy. –Wind-Up
851	221798	Terminal–Ignition Cable
869	210879	Seat–Intake Valve (Standard)
870	211291	Seat–Exhaust Valve (Standard)
871	63709	Guide–Exhaust Valve
898	92507	Lockwasher–Internal Tooth
899	93397	Lockwasher–External Tooth

K&T Saw Shop 606-678-9623 or 606-561-4983